High Density Catalog.pdf 1 05/04/2022 13:52:06



AMP Soft Shell Pin and Socket Connectors

CONNECTOR & WIRE INDUSTRIAL (PTY) LTD

High Density Catalog.pdf 1 05/04/2022 13:54:54

Restriction on the use of Hazardous Substances (RoHS)

At Tyco Electronics, we're ready to support your RoHS requirements. We've assessed more than 1.5 million end items/components for RoHS compliance, and issued new part numbers where any change was required to eliminate the restricted materials.

Part numbers in this catalog are RoHS Compliant, unless marked otherwise. These products comply with European Union Directive 2002/95/EC, as amended 1 January 2006, that restricts the use of lead, mercury, cadmium, hexavalent chromium, PBB, and PBDE in certain electrical and electronic products sold into the EU as of 1 July 2006.

Note: For purposes of this Catalog, included within the definition of RoHS Compliant are products that are clearly "Out of Scope" of the RoHS Directive such as hand tools and other non-electrical accessories. Information regarding RoHS compliance is provided based on reasonable inquiry of our suppliers and represents our current actual knowledge based on the information provided by our suppliers. This information is subject to change. For latest compliance status, refer to our website referenced at right.

Getting the Information You Need

Our comprehensive on-line RoHS Customer Support Center provides a forum to answer your questions and support your RoHS needs. A RoHS FAQ (Frequently Asked Questions) is available with links to more detailed information. You can also submit RoHS questions and receive a response within 24 hours during a normal work week. The Support Center also provides:

- Cross-Reference from Non-compliant to Compliant Products
- Ability to browse RoHS Compliant Products in our on-line catalog
- Downloadable Technical Data
- Customer Information Presentation
- More detailed information regarding the definitions used above

So whatever your questions when it comes to RoHS, we have the answers at **www.tycoelectronics.com/leadfree**

RoHS Customer Support Center

©1977-1980, 1983, 1986, 1988, 1992-1995, 1997, 1998, 2001, 2003, 2006 and 2007 by Tyco Electronics Corporation. All Rights Reserved.

High Density Catalog.pdf 1 05/04/2022 13:55:14

Table of Contents

Introduction

AMP Soft Shell Pin and Socket Connectors provide a highly reliable and economic means of grouping multiple-lead connections in today's computer, computer/peripheral equipment, business machines, entertainment centers, appliances and other sophisticated commercial equipment. The electrical connector is an integral component in these applications. They also offer worldwide application approval because of their reliability and economy. Electrical functions have increased in complexity and new designs continually call for the maximum use of space. The Soft Shell Pin and Socket family of connectors offers the design and features to answer these modern industry requirements.

This catalog is organized by contact centerline spacing (High Density and Standard Density) to provide you with the basic information necessary to select the Soft Shell connector system best suited for your specific application. It contains general information to acquaint you with the complete family of connectors and application tooling.

Since your specific application will determine the degree of automatic, semiautomatic or manual application tooling required, complete specifications are covered on pages 207-204.

Summary Chart

Page No.	Product Name	No. of Positions	Centerline (in) mm	Wire Size (AWG)	Wire Insulation Dia. Max. (in) mm	Current Rating Max (A)*	Voltage Rating Max.	Operating Temp. Range (C)	UL94 Flammability Rating	Sealed Version Available	Approvals
High Density											
9	2.5 mm Signal Double Lock (SDL)	2-13	(.098) 2.50	26-20	(.071) 1.80	3	50 VAC or VDC	-30° to +105°	V-0	No	UL, CSA, VDE
17	Micro MATE-N-LOK 3 mm	2-24	(.118) 3.00	30-20	(.060) 1.52	5	250 VAC	-40° to +105°	V-0	No	UL, CSA, VDE
49	Grace Inertia Connectors (GIC) 3.5	2-6	(.137) 3.50	26-18	(.106) 2.70	7	300 VAC	-30° to +105°	V-0	No	UL, CSA
53	.062 Commercial Pin & Socket	1-9	(.145) 3.68	30-18	(.110) 2.79	7	250 VAC or VDC	-55° to +105°	V-2	No	UL, CSA
59	Power Double Lock (PDL)	1-12 3-12 2 2	(.156) 3.96 (.256) 6.50 (.312) 7.92 (.512) 13.00	26-16	(.122) 3.10	14	300 VAC (3.96 WTW, 6.5 WTB and 7.92 WTB) 50 VAC (3.96 WTB)	-30° to +105°	V-0	No	UL, CSA, VDE
83	Mini-Universal MATE-N-LOK	1-24	(.163) 4.14	30-16	(.126) 3.20	9.5	600 VAC or VDC	-55° to +105°	V-0 & V-2	Yes	UL, CSA, VDE (250 V Max.)
99	Mini-Universal MATE-N-LOK 2	2-24	(.163) 4.14	30-16	(.126) 3.20	10.5	600 VAC or VDC	-55° to +105°	V-0 & V-2	No	UL, CSA, VDE
109	MR (Miniature Rectangular)	2-36	(.165) 4.20	26-18	(.115) 2.92	9	250 VAC	-55° to +85°	V-0	No	UL, CSA
119	VAL-U-LOK Connector System	2-24	(.165) 4.20	26-18	(.094) 2.39	9	600 VAC	-40° to +105°	V-0 & V-2	No	UL, CSA
125	AMP-DUAC	2-24	(.165) 4.20	26-18	(.130) 3.30	9	600 VAC	-55° to +105°	V-2	No	UL, CSA
Standard Density											
135	5.0 mm Power Key Connectors (PKC)	2-6	(.197) 5.00	24-16	(.122) 3.10	10	300 VAC	-30° to +105°	V-0	No	UL, CSA
143	.093 Commercial Pin & Socket	1-15	(.198) 5.03	14-24	(.180) 4.57	13	250 VAC or VDC	-55° to +105°	V-2	No	UL, CSA
151	Commercial MATE-N-LOK	1-16	(.200) 5.08	30-14	(.130) 3.30	19	250 VAC	-55° to +105°	V-2	No	UL, CSA
165	.140 MATE-N-LOK	2-9	(.240) 6.10	20-10	(.180) 4.57	28	600 VAC or VDC	-55° to +105°	V-2	No	UL, CSA
169	Universal MATE-N-LOK	1-15	(.250) 6.35	30-10	(.200) 5.08	19	600 VAC or VDC	-55° to +105°**	V-0 & V-2	Yes	UL, CSA: designed and tested to meet VDE 380 V requirements, except 6 Position Circular
189	Universal MATE-N-LOK II	2-15	(.250) 6.35	30-10	(.200) 5.08	19	600 VAC or VDC	-55° to +105°	V-0	No	UL, CSA, VDE
203	.156 MATE-N-LOK	3-4	(.390) 9.91	20-10	(.185) 4.70	32.5	600 VAC	-55° to +105°	V-2	No	UL

*Current Rating is application dependent
** 125°C Available

Catalog 82181
Revised 4-08

https://cwindustrial.co.za/

Dimensions are in inches and millimeters unless otherwise specified. Values in brackets are metric equivalents.

Dimensions are shown for reference purposes only. Specifications subject to change.

USA: 1-800-522-6752
Canada: 1-905-470-4425
Mexico: 01-800-733-8926
C. America: 52-55-1106-0803

South America: 55-11-2103-6000
Hong Kong: 852-2735-1628
Japan: 81-44-844-8013
UK: 44-8706-080-208

High Density Catalog.pdf 1 05/04/2022 13:55:28

High Density

Need more information?

Call Technical Support at a local number listed on the inside back cover.

Technical Support is staffed with specialists well versed in Tyco Electronics products.

Table of Contents (Continued)

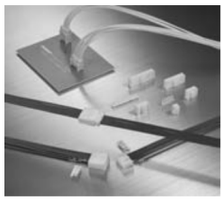

2.5 mm Signal Double Lock (2.5 SDL) Connectors 9-16
Product Facts 9
Performance Characteristics 9
Quick Reference Chart for Mating Part Numbers and Future Product Plans 10
Mating Configurations (Wire-To-Wire and Wire-To-Board) 11
Contacts and Double Lock Plates 12
Plug Housings 13
Cap Housings 14
Headers, PC Board, Vertical: Standard-Profile 15
High-Profile 16

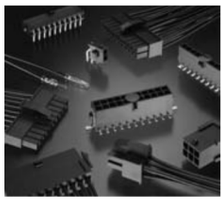

Micro MATE-N-LOK 3 mm Connector System 17-47
Product Facts 17
Performance Characteristics 17-18
Connector Application 19-21
Contacts 22
Receptacle Housings 23-24
Plug Housings 25-28
Low Profile 29
Vertical Header Assemblies 30-37
Right-Angle Header Assemblies 38-47

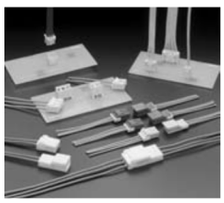

Grace Inertia Connectors (GIC), 3.5 49-52
Product Facts 49
Performance Characteristics 49
Contacts and Double Lock Plates 50
Housings: Plug and Cap 51-52

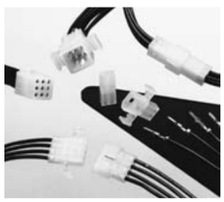

.062 [1.57] Commercial Pin and Socket Connectors 53-57
Product Facts 53
Performance Characteristics 53-54
Contacts 55
Housings: Free-Hanging or Panel Mount 56-57
Recommended Panel Cutouts 57

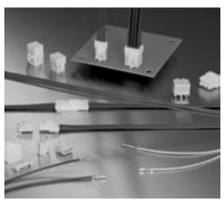

Power Double Lock (PDL) Connectors 59-81
Product Facts 59
Performance Characteristics 59
Quick Reference Chart for Mating Part Numbers 60
Contacts 61
Housings: Free-Hanging Plug (3.96 mm centerline) 62-64
Free-Hanging Cap (3.96 mm centerline) 65-66
Panel Mount Cap (3.96 mm centerline) 67-70
Double Lock Plates (3.96 mm centerline) 71
Tab Headers, PC Board, Vertical: 3.96 mm centerline 72-73
7.92 mm centerline 74
Housings: Free-Hanging Plug (6.5 mm centerline) 75-76
Double Lock Plates (6.5 mm centerline) 77
Housings: Panel Mount Cap (6.5 mm centerline) 78
Tab Headers, PC Board, Vertical: 6.5 and 13 mm centerlines 79-81

ISO 9001 Certified

Produced under a Quality Management System certified to ISO 9001

ACTION PIN, AMP, AMP-DUAC, AMP-O-LECTRIC, AMPOMATOR, AMP-O-MATIC, CERTI-CRIMP, FASTON, MATE-N-LOK, PRO-CRIMPER, TE Logo and Tyco Electronics and VAL-U-LOK are trademarks.

Kapton is a trademark of E.I. du Pont de Nemours and Company.

MOLEX Mini-Fit and Mini-Fit Jr. are trademarks of Molex, Incorporated.

Other products, logos, and Company names mentioned herein may be trademarks of their respective owners.

Catalog 82181
Revised 4-08

https://cwindustrial.co.za/

Dimensions are in inches and millimeters unless otherwise specified. Values in brackets are metric equivalents.

Dimensions are shown for reference purposes only. Specifications subject to change.

USA: 1-800-522-6752
Canada: 1-905-470-4425
Mexico: 01-800-733-8926
C. America: 52-55-1106-0803

South America: 55-11-2103-6000
Hong Kong: 852-2735-1628
Japan: 81-44-844-8013
UK: 44-8706-080-208

High Density Catalog.pdf 1 05/04/2022 13:55:39

Table of Contents (Continued)

High Density
(Continued)

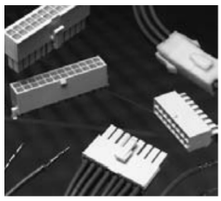

Mini-Universal MATE-N-LOK Connectors 83-94
Product Facts.....83
Performance Characteristics.....83-84
Mating Combinations.....85
Contacts, Keying Plug, Wire Seal and Test Probe Contact.....86
Housings: Free-Hanging or Panel Mount.....87-88
Hermaphroditic Free-Hanging.....89
Headers, PC Board: Vertical Pin and Blindmate.....90-91
Right-Angle Pin.....92
Recommended PC Board Hole Layouts.....93
Plug or Cap Housing Strain Reliefs.....94

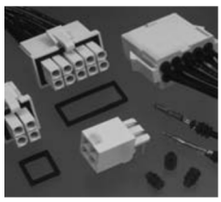

Mini-Universal MATE-N-LOK Sealed Connectors 95-97
Product Facts.....95
Performance Characteristics.....95
Plug or Cap Housing.....96
Individual Wire Seals.....96
Gang Seals and Contacts.....97



Mini-Universal MATE-N-LOK 2 Connectors.....99-107
Product Facts.....99
Performance Characteristics.....99-100
Contacts and Keying Plug.....101
Housings: Free-Hanging.....101-102
Headers, PC Board: Vertical Pin and Blindmate.....103-104
Right-Angle Pin.....105
Recommended PC Board Hole Layouts.....106
Mating Combinations.....107



(MR) Miniature Rectangular Connectors.....109-118
Product Facts.....109
Performance Characteristics.....109-110
Mating Combinations.....111
Contacts and Keying Plug.....112
Housings: Free-Hanging or Panel Mount.....113-114
Recommended Panel Cutouts.....115
Strain Reliefs, Adapting Grommets and Commoning Bars.....116
Headers, PC Board: Vertical Pin.....117-118
Recommended PC Board Hole Layouts.....117-118

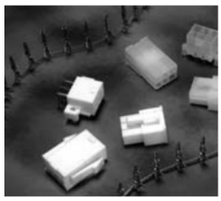

VAL-U-LOK Connector System 119-124
Product Facts.....119
Performance Characteristics.....119
Contacts.....120
Housings (Single Row): Panel Mount Plug.....121
Free-Hanging Plug.....121
Receptacle.....121
Housings (Double Row): Panel Mount Plug.....122
Free-Hanging Plug.....122
Colored.....122
Receptacle.....122
Pin Headers, PC Board: Vertical and Right-Angle.....123
Blind Mate Headers.....124

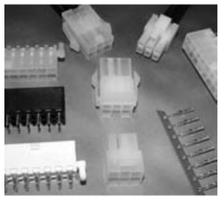

AMP-DUAC Connectors.....125-133
Product Facts.....125
Performance Characteristics.....125
Receptacle Housings and Female Contacts.....126
Plug Housings and Male Contacts.....127
Headers, PC Board: Vertical.....128-133
Right-Angle.....133
Strain Relief, 6 Position (for Receptacle or Plug Housing).....127

Catalog 82181
Revised 4-08

https://cwindustrial.co.za/

Dimensions are in inches and millimeters unless otherwise specified. Values in brackets are metric equivalents.

Dimensions are shown for reference purposes only. Specifications subject to change.

USA: 1-800-522-6752
Canada: 1-905-470-4425
Mexico: 01-800-733-8926
C. America: 52-55-1106-0803

South America: 55-11-2103-6000
Hong Kong: 852-2735-1628
Japan: 81-44-844-8013
UK: 44-8706-080-208

High Density Catalog.pdf 1 05/04/2022 13:55:52

Table of Contents (Continued)

Standard Density

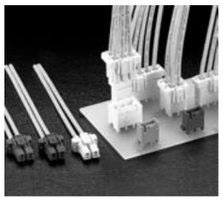

5.0 mm Power Key Connectors (5.0 PKC).....135-141
Product Facts 135
Performance Characteristics 135
Quick Reference Chart for Mating Part Numbers.....136
Contacts and Double Lock Plates 137
Plug Housings: 1 Row 138
2 Row 139
Headers, PC Board, Vertical: 1 Row 140
2 Row 141



.093 [2.36] Commercial Pin and Socket Connectors 143-149
Product Facts.....143
Performance Characteristics.....143-144
Contacts 145
Housings: Free-Hanging or Panel Mount.....146-149

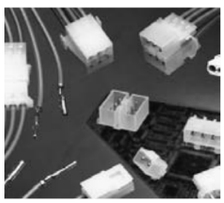

Commercial MATE-N-LOK Connectors.....151-164
Product Facts.....151
Performance Characteristics.....151-152
Mating Combinations.....153-154
Contacts, Commoning Tabs and Keying Plug.....155-156
Housings: Free-Hanging.....157
Positive Lock 158
Panel Mount 159
Flange Mount and Motor Mount.....160
Headers, PC Board: Vertical Pin 161
Surface Mount Right-Angle Pin and Vertical Socket.....162
Right-Angle Pin 163
Insulation Displacement Connectors (IDC) and Dust Covers 163
Right-Angle Pin Headers with Fix Belt.....164

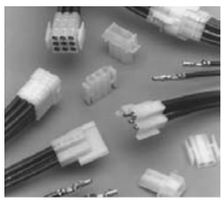

.140 MATE-N-LOK Connectors 165-167
Product Facts.....165
Performance Characteristics 165
Contacts 166
Housings: Free-Hanging.....166
Panel Mount 167

Catalog 82181
Revised 4-08

https://cwindustrial.co.za/

Dimensions are in inches and millimeters unless otherwise specified. Values in brackets are metric equivalents.

Dimensions are shown for reference purposes only. Specifications subject to change.

USA: 1-800-522-6752
Canada: 1-905-470-4425
Mexico: 01-800-733-8926
C. America: 52-55-1106-0803

South America: 55-11-2103-6000
Hong Kong: 852-2735-1628
Japan: 81-44-844-8013
UK: 44-8706-080-208

High Density Catalog.pdf 1 05/04/2022 13:56:03

Table of Contents (Continued)

Standard Density
(Continued)

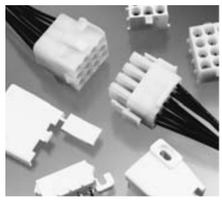

Universal MATE-N-LOK Connectors 169-185
Product Facts.....169
Performance Characteristics.....169-170
Mating Combinations.....171
Contacts.....172-173
Housings: Free-Hanging or Panel Mount.....174
Cap Housing Panel Cutouts, Keying Plugs and Plug Housing Strain Reliefs.....175
Plug or Cap Housing Strain Reliefs and Cap Housing Adapters.....176
Flanged Cap Housings with Twist and Lock Feature.....177
Sealed Bulkhead Connectors.....178-179
Splash-Proof Seals.....180
Contacts (used with Splash-Proof Seals).....181
Headers, PC Board: Vertical Pin.....182
Vertical Socket.....183
Recommended PC Board Hole Layouts.....184
PC Board Vertical Pin Headers with ACTION PIN Contacts.....184
Right-Angle Pin and Socket.....185
Test Connectors.....185
Circular Connectors.....186-188
Universal MATE-N-LOK Connectors — Available in Colors.....188



Universal MATE-N-LOK II Connectors 189-202
Product Facts.....189
Performance Characteristics.....189-190
Mating Combinations.....191
Contacts.....192
Housing Kits: Free-Hanging or Panel Mount.....193-194
Housing Components: Free-Hanging or Panel Mount.....195
Plug or Cap Housing Strain Reliefs and Keying Plug.....196
Headers, PC Board: Vertical Pin.....197
Vertical Socket.....198
Recommended PC Board Hole Layouts.....199
PC Board Vertical Pin Headers with ACTION PIN Contacts.....199
Right-Angle Pin and Socket.....200
High Current Contacts.....201
High Current Vertical Pin Headers.....202



.156 MATE-N-LOK Connectors 203-204
Product Facts.....203
Contacts.....203
Housings: Free-Hanging.....204
Panel Mount.....204

Technical Documents.....205-206
Application Tooling.....207-210
Applicator Options.....211-213
Product Feature Comparisons.....214-215
Non-Compliant to RoHS Compliant Part Number Cross Reference.....216-220
Part Number Index.....221-226
Tooling Part Number Index.....227
Global Contacts.....229

High Density Catalog.pdf 1 05/04/2022 13:56:24

Engineering Notes

Catalog 82181
Revised 4-08

https://cwindustrial.co.za/

Dimensions are in inches and millimeters unless otherwise specified. Values in brackets are metric equivalents.

Dimensions are shown for reference purposes only. Specifications subject to change.

USA: 1-800-522-6752
Canada: 1-905-470-4425
Mexico: 01-800-733-8926
C. America: 52-55-1106-0803

South America: 55-11-2103-6000
Hong Kong: 852-2735-1628
Japan: 81-44-844-8013
UK: 44-8706-080-208

High Density Catalog.pdf 1 05/04/2022 13:56:39

2.5 mm Signal Double Lock (2.5 SDL) Connectors (Wire-to-Board and Wire-to-Wire)

Product Facts

- **Connector for signal circuits with one row of contacts on 2.5 mm centerline**
- **Wire-to-board and wire-to-wire connectors, consisting of plug and cap housings for wire termination and PC board-mount post headers**
- **Mounted to plug and cap housings for wire application, double lock plate provides for positive loading of contacts in the housing. It also helps contacts mate completely**
- **Double lock plate is contained within the plug and cap housing completely, which provides neat overall appearance**
- **Accepts 26-20 AWG wire (e.g. UL 1007, 1061, 1571, etc.) with insulation diameters of up to 1.8 mm**
- **PC board-mount post header is available in two styles: standard profile and high profile**
- **High-profile post header has locking feature at location fit to resin coating, which is applied onto the board for waterproof protection as in home appliances. It does not hamper mating and locking of post header with plug housing**
- **Locking structure is inner-lock type and has a clean surface**
- **Solder tail section of post header is provided with kinks to retain the header firmly on PC board during soldering**
- **Radial tape-mounted version of post header is also available that is applicable to radial mounting machines**
- **Recognized under the Component Program of Underwriters Laboratories Inc., File No. E28476**
- **Certified by Canadian Standards Association, File No. LR7189**
- **VDE Approved, File No. B 04 11 39175013**

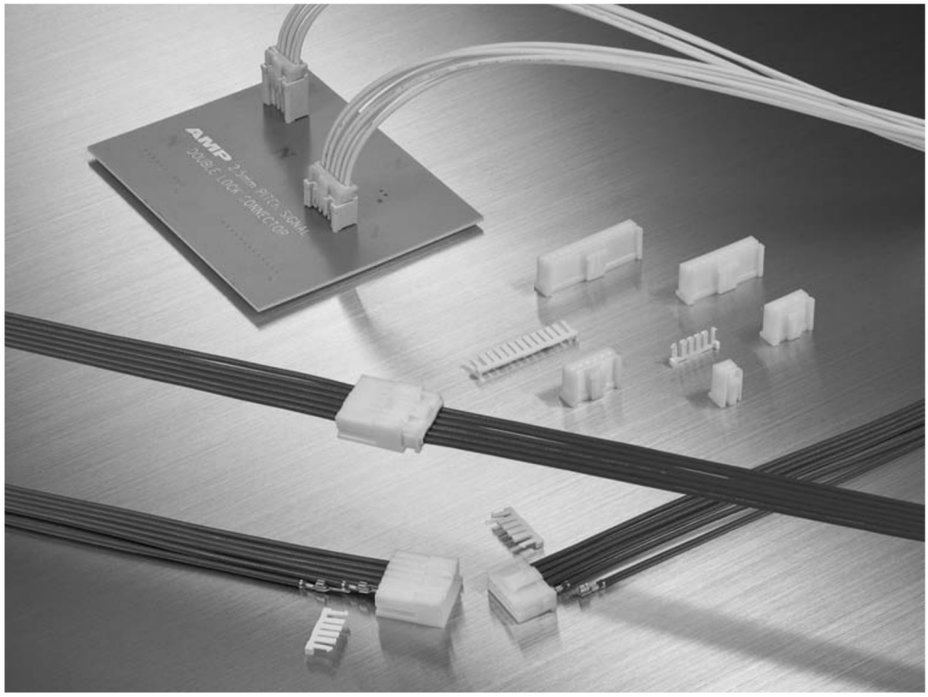

2.5 mm Signal Double Lock Connectors (2.5 SDL) are 2.5 mm centerline, compact, one-row connectors for signal circuits.

With contacts on 2.5 mm centerline, both wire-to-wire and wire-to-board connectors are available.

The connectors consist of plug and cap housings for wire termination, double lock plates for plug and cap housings, crimp snap-in contacts, and a PC board-mount post header. A double lock plate is available for both plug and wire-to-wire cap housing to provide for positive loading. It helps prevent contacts from coming off or mating halfway. The plate is contained within the plug and cap housing completely. The plug and cap housing can be used without a double lock plate.

The connector accepts 26-20 AWG wire (e.g. UL 1007, 1061, 1571, etc.) with insulation diameters of up to 1.8 mm.

The PC board-mount post header is available in two styles: standard profile and high profile.

The high-profile type connectors can be used for home appliances, which require waterproof protection. It does not hamper mating and locking of the post header with the plug housing, even if the board has resin coating on it.

The locking structure is inner-lock type and has a clean surface.

The solder tail of the loose-piece post header has kinks to secure the connector on the PC board until it is soldered.

Radial tape-mounted version of post header is also available and this is applicable to radial mounting machines.

Performance Characteristics

Voltage Rating—50 VAC/DC

Current Rating—3 A

Overall Resistance—
10 mΩ max. (initial)
20 mΩ max. (final)

Insulation Resistance—
500 Ω (500 VDC)

Dielectric Withstanding Voltage—
1,100 VAC, one minute

Contact Resistance—20 mΩ max.

Operating Temperature—
-30°~ + 105°C
(The upper limit includes temperature rise from power carrying)

Applicable Wire—26-20 AWG (UL 1007, 1061, 1571)

Wire Insulation Range—
0.93~ 1.8 mm

PC Board Thickness—1.6 mm

Technical Documents

Product Specification

108-5459

Application Specification

114-5203

Note: **Dimensions shown are metric.**

Catalog 82181
Revised 4-08

https://cwindustrial.co.za/

Dimensions are in inches and millimeters unless otherwise specified. Values in brackets are metric equivalents.

Dimensions are shown for reference purposes only. Specifications subject to change.

USA: 1-800-522-6752
Canada: 1-905-470-4425
Mexico: 01-800-733-8926
C. America: 52-55-1106-0803

South America: 55-11-2103-6000
Hong Kong: 852-2735-1628
Japan: 81-44-844-8013
UK: 44-8706-080-208

High Density Catalog.pdf 1 05/04/2022 13:56:53

2.5 mm Signal Double Lock (2.5 SDL) Connectors (Wire-to-Board and Wire-to-Wire) (Continued)

Quick Reference Chart for Mating Part Numbers

No. of Pos.	Plug Connector Part No. (Wire Side)		Mating Connectors (PC Board Mount & Wire Side)			
			Post Header Part No.		Cap Connector Part No.	
	Housing	Double Lock Plate	Standard-Profile Type*	High-Profile Type	Cap Housing	Double Lock Plate
2	917686-1	917698-1	917780-1	917722-1	316086-1	917698-1
3	917687-1	917699-1	917781-1	917723-1	316087-1	917699-1
4	917688-1	917700-1	917782-1	917724-1	316088-1	917700-1
5	917689-1	917701-1	917783-1	917725-1	316089-1	917701-1
6	917690-1	917702-1	917784-1	917726-1	316090-1	917702-1
7	917691-1	917703-1	917785-1	917727-1	316091-1	917703-1
8	917692-1	917704-1	917786-1	917728-1	316092-1	917704-1
9	917693-1	917705-1	917787-1	917729-1	——	917705-1
10	917694-1	917706-1	917788-1	917730-1	316094-1	917706-1
11	917695-1	917707-1	917789-1	917731-1	——	917707-1
12	917696-1	917708-1	917790-1	917732-1	——	917708-1
13	917697-1	917709-1	917791-1	917733-1	——	917709-1

*Included in Standard-Profile Post Header line are Radial Tape-Mounted version (2 to 8 positions). Refer to appropriate description in the catalog.

Note: **All part numbers are RoHS Compliant.**

Product Family List (Including Production Plans)

Description			Number of Positions										
			2	3	4	5	6	7	8	9	10	11	12	13
Plug Housing			●	●	●	●	●	●	●	●	●	●	●	●
Vertical Board Mount Post Header	Standard-Profile Type	Loose Piece	●	●	●	●	●	●	●	●	●	●	●	●
		Radial Tape-Mounted	●	●	●	●	●	●	●	–	–	–	–	–
	High-Profile Type	Loose Piece	●	●	●	●	●	●	●	●	●	●	●	●
		Radial Tape-Mounted	●	●	●	●	●	●	●	–	–	–	–	–
Cap Housing			●	●	●	●	●	●	●	○	●	○	○	○
Double Lock Plate			●	●	●	●	●	●	●	●	●	●	●	●
Horizontal Board Mount Post Header			○	○	○	○	○	○	○	○	○	○	○	○
Horizontal Mount Post Header (Radial Tape-Mounted)			○	○	○	○	○	○	○	–	–	–	–	–

Note: ● indicates products currently available; ○ indicates products planned for production.

Note: **Dimensions shown are metric.**

Catalog 82181
Revised 4-08

https://cwindustrial.co.za/

Dimensions are in inches and millimeters unless otherwise specified. Values in brackets are metric equivalents.

Dimensions are shown for reference purposes only. Specifications subject to change.

USA: 1-800-522-6752
Canada: 1-905-470-4425
Mexico: 01-800-733-8926
C. America: 52-55-1106-0803

South America: 55-11-2103-6000
Hong Kong: 852-2735-1628
Japan: 81-44-844-8013
UK: 44-8706-080-208

High Density Catalog.pdf 1 05/04/2022 13:57:06

2.5 mm Signal Double Lock (2.5 SDL) Connectors (Wire-to-Board and Wire-to-Wire) (Continued)

Mating Configurations

Wire-to-Wire Connections

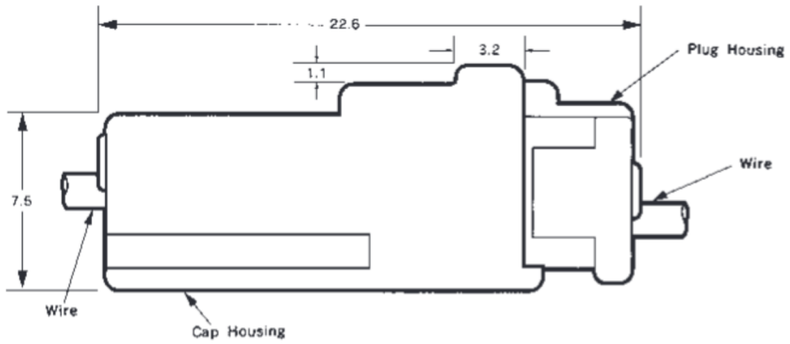

Wire-to-PC Board Connections

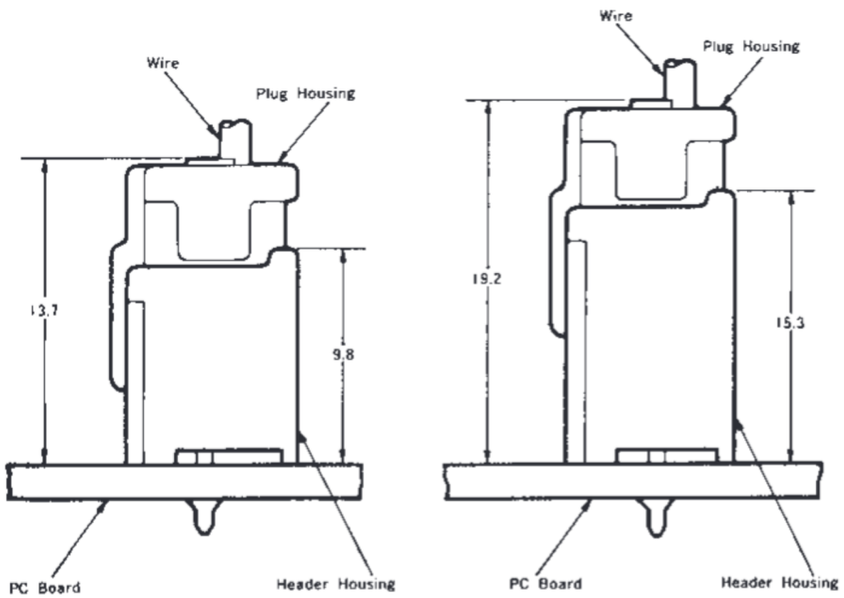

Standard-Profile Type **High-Profile Type**

Note: **Dimensions shown are metric.**

High Density Catalog.pdf 1 05/04/2022 13:57:23

2.5 mm Signal Double Lock (2.5 SDL) Connectors (Wire-to-Board and Wire-to-Wire) (Continued)

Contacts

Material and Finish

Pre-tinned phosphor bronze (0.2 mm thick)

Receptacle for Plug Housing, Tab for Cap Housing

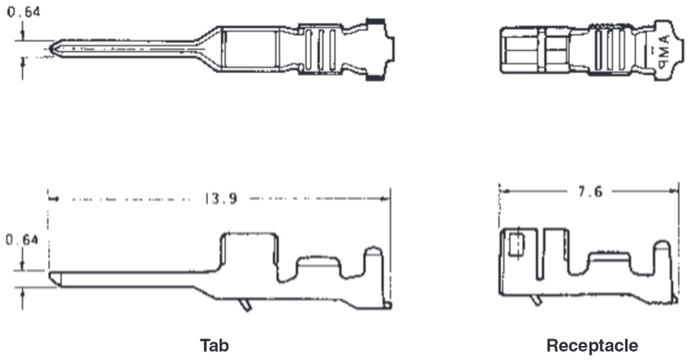

Tab Receptacle

Wire Range		Wire Ins. Dia.	Contact Part Number				Applicator Part Number
			Tab		Receptacle		
AWG	mm²		Strip Form	Loose Piece	Strip Form	Loose Piece	
26-22	0.12~0.35	0.93~1.50	917765-1	316399-1	917684-1	316401-1	*
22-20	0.30~0.53	1.40~1.80	917764-1	316398-1	917683-1	316400-1	*

Hand Tool Part No.: for 26-22 AWG = 234604-1 (Instruction Sheet 411-5736)
22-20 AWG = 234603-1 (Instruction Sheet 411-5735)

Extraction Tool Part No.: 234605-1 (Instruction Sheet 411-5737)

* Contact the Tooling Assistance Center (TAC) at 1-800-722-1111 for Applicator Part Number.

Double Lock Plates

Material

UL94V-0, 6/6 Nylon, glass filled, natural color

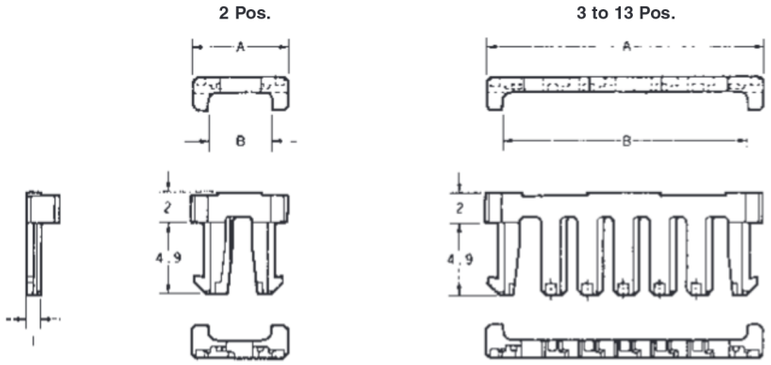

No. of Pos.	Dimensions of Double Lock Plate		Double Lock Plate Part Number	Applicable Housing Part Number	
	A	B		Plug	Cap
2	06.5	04.3	917698-1	917686-1	316086-1
3	09.0	06.8	917699-1	917687-1	316087-1
4	11.5	09.3	917700-1	917688-1	316088-1
5	14.0	11.8	917701-1	917689-1	316089-1
6	16.5	14.3	917702-1	917690-1	316090-1
7	19.0	16.8	917703-1	917691-1	316091-1
8	21.5	19.3	917704-1	917692-1	316092-1
9	24.0	21.8	917705-1	917693-1	——
10	26.5	24.3	917706-1	917694-1	316094-1
11	29.0	26.8	917707-1	917695-1	——
12	31.5	29.3	917708-1	917696-1	——
13	34.0	31.8	917709-1	917697-1	——

Extraction Tool Part No. for Double Lock Plate: 234605-1 (Instruction Sheet 411-5737)

Note: All part numbers are RoHS Compliant.

Note: Dimensions shown are metric.

High Density Catalog.pdf 1 05/04/2022 13:57:40

2.5 mm Signal Double Lock (2.5 SDL) Connectors (Wire-to-Board and Wire-to-Wire) (Continued)

Plug Housings (For Receptacle Contacts)

2 to 13 Positions

Material

UL94V-0, 6/6 Nylon, color (see chart)

Related Product Data

Receptacle Contact Part No.

917684-1 (26-22 AWG)
917683-1 (22-20 AWG)

Double Lock Plate—page 12
Mating Cap Housings—page 14
Mating Post Headers—pages 15-16

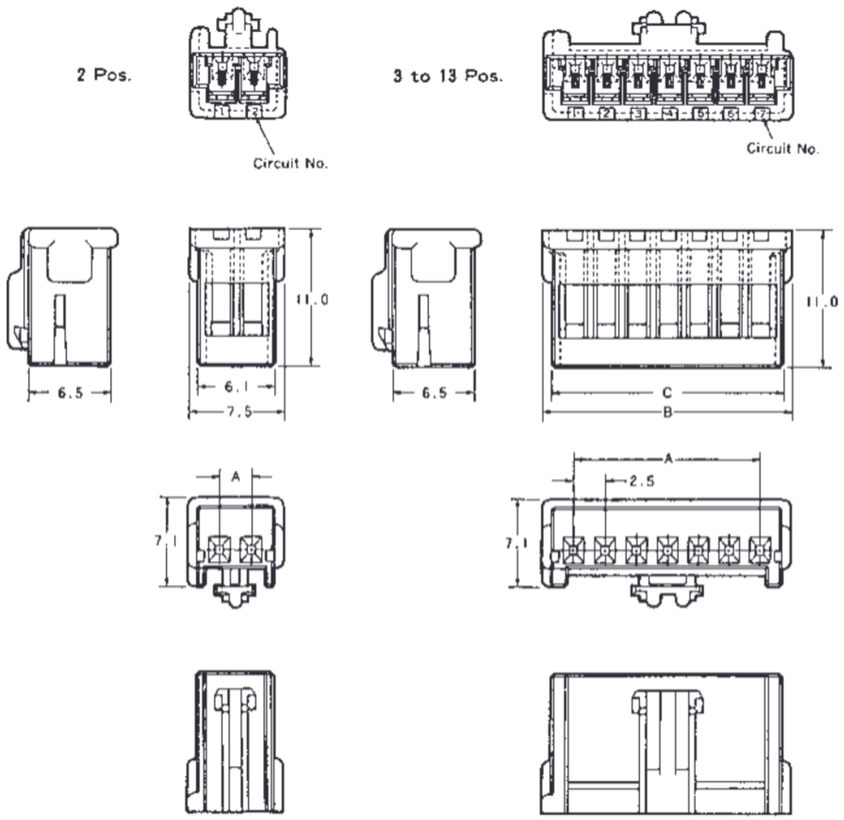

No. of Pos.	Dimensions			Plug Housing Part Number					
	A	B	C	Natural	Red	Yellow	Green	Blue	Black
2	02.5	07.5	06.1	917686-1	917686-2	917686-4	917686-5	917686-6	917686-9
3	05.0	10.0	08.6	917687-1	917687-2	917687-4	——	917687-6	917687-9
4	07.5	12.5	11.1	917688-1	917688-2	917688-4	——	——	917688-9
5	10.0	15.0	13.6	917689-1	917689-2	——	——	917689-6	——
6	12.5	17.5	16.1	917690-1	917690-2	917690-4	——	917690-6	917690-9
7	15.0	20.0	18.6	917691-1	917691-2	917691-4	——	——	917691-9
8	17.5	22.5	21.1	917692-1	——	——	——	917692-6	——
9	20.0	25.0	23.6	917693-1	917693-2	917693-4	——	——	——
10	22.5	27.5	26.1	917694-1	——	917694-4	——	——	——
11	25.0	30.0	28.6	917695-1	——	——	——	——	——
12	27.5	32.5	31.1	917696-1	917696-2	——	——	——	——
13	30.0	35.0	33.6	917697-1	917697-2	——	——	——	——

Note: **All part numbers are RoHS Compliant.**

Catalog 82181
Revised 4-08

https://cwindustrial.co.za/

Dimensions are in inches and millimeters unless otherwise specified. Values in brackets are metric equivalents.

Dimensions are shown for reference purposes only. Specifications subject to change.

USA: 1-800-522-6752
Canada: 1-905-470-4425
Mexico: 01-800-733-8926
C. America: 52-55-1106-0803

South America: 55-11-2103-6000
Hong Kong: 852-2735-1628
Japan: 81-44-844-8013
UK: 44-8706-080-208

High Density Catalog.pdf 1 05/04/2022 13:57:56

2.5 mm Signal Double Lock (2.5 SDL) Connectors (Wire-to-Wire)

Cap Housings (For Tab Contacts)

2 to 10 Positions

Material

UL94V-0, 6/6 Nylon, color (see chart)

Related Product Data

Tab Contact Part No.
917765-1 (26-22 AWG)
917764-1 (22-20 AWG)

Double Lock Plate—page 12

Mating Plug Housings—page 13

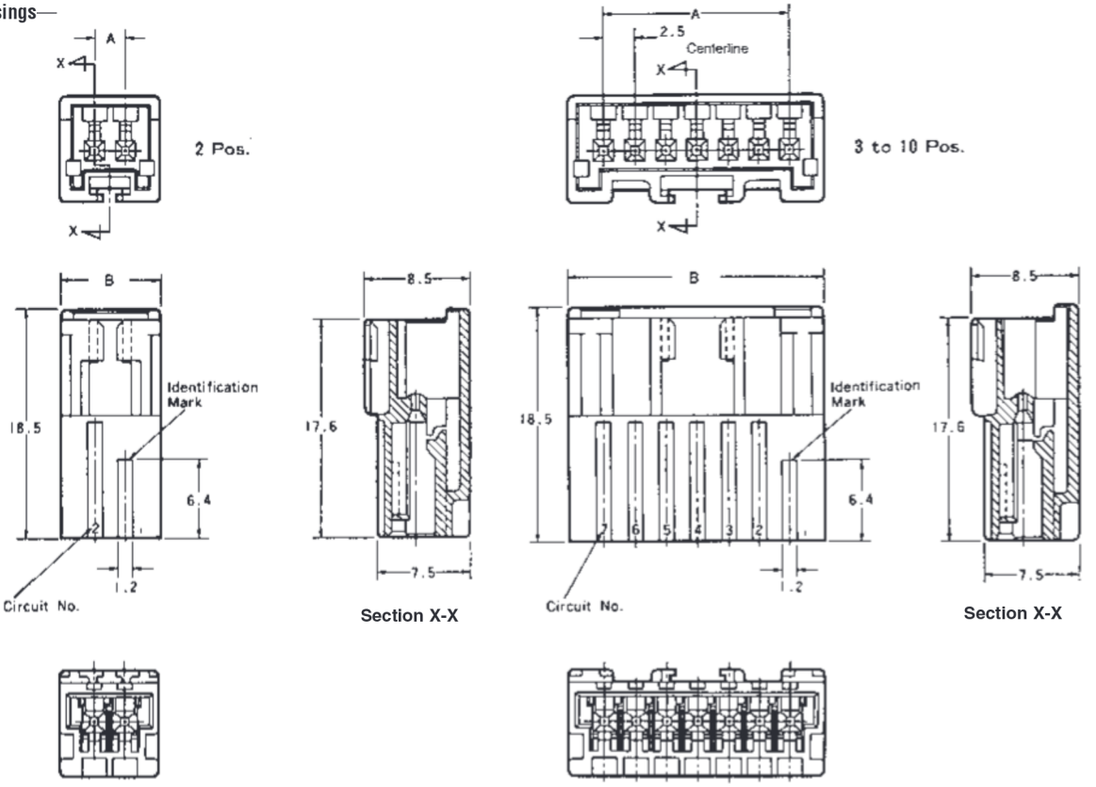

No. of Pos.	Dimensions		Cap Housing Part Number				
	A	B	Natural	Red	Yellow	Blue	Black
2	02.5	08.1	316086-1	316086-2	316086-4	316086-6	316086-9
3	05.0	10.6	316087-1	——	316087-4	——	316087-9
4	07.5	13.1	316088-1	316088-2	306088-4	——	316088-9
5	10.0	15.6	316089-1	316089-2	——	——	——
6	12.5	18.1	316090-1	——	——	——	——
7	15.0	20.6	316091-1	——	——	——	316091-9
8	17.5	23.1	316092-1	——	——	——	——
10	22.5	28.1	316094-1	——	316094-4	——	——

Note: **All part numbers are RoHS Compliant.**

Note: **Dimensions shown are metric.**

Catalog 82181
Revised 4-08

https://cwindustrial.co.za/

Dimensions are in inches and millimeters unless otherwise specified. Values in brackets are metric equivalents.

Dimensions are shown for reference purposes only. Specifications subject to change.

USA: 1-800-522-6752
Canada: 1-905-470-4425
Mexico: 01-800-733-8926
C. America: 52-55-1106-0803

South America: 55-11-2103-6000
Hong Kong: 852-2735-1628
Japan: 81-44-844-8013
UK: 44-8706-080-208

High Density Catalog.pdf 1 05/04/2022 13:58:13

2.5 mm Signal Double Lock (2.5 SDL) Connectors (Wire-to-Wire) (Continued)

Vertical Post Headers (For PC Board Mount)

Standard-Profile Type

Material and Finish

Header Housings
UL94V-0, 6/6 Nylon, glass filled, color (see chart)

Post Contact
Pre-tinned copper alloy

Related Product Data

Mating Plug Housings—
page 13

2 Pos.

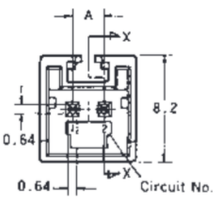

3 to 13 Pos.

Designs of 5 pos. to 8 pos. header housings are slightly different, please request the drawings.

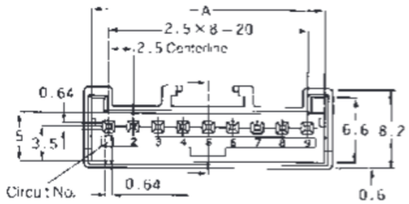

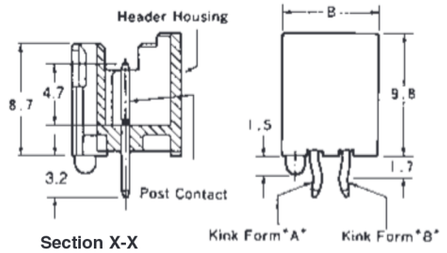

Section X-X

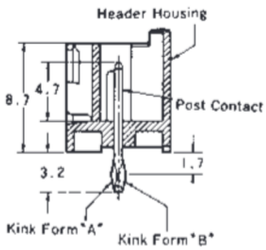

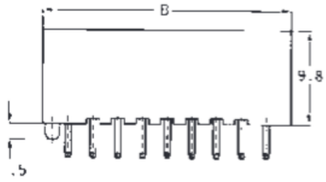

Section X-X

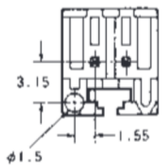

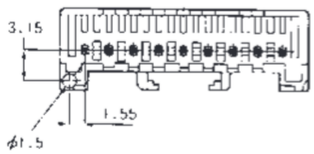

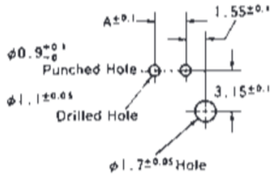

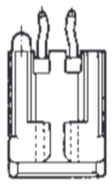

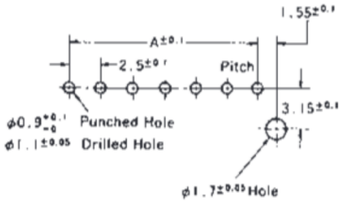

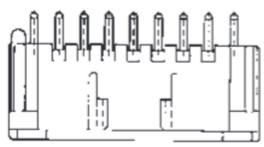

No. of Pos.	Dimensions		Post Header Part Number								(Qty.)
			Loose Piece					Radial Tape-Mounted			
	A	B	Natural	Red	Yellow	Blue	Black	Natural	Red	Yellow	
2	02.5	07.5	□-917780-1*1	□-917780-2*1	——	——	□-917780-9*1	□-917894-1*3	——	——	(900)
3	05.0	10.0	□-917781-1*1	□-917781-2*1	——	——	□-917781-9*1	□-917895-1*4	□-917895-2	——	(900)
4	07.5	12.5	□-917782-1*1	□-917782-2*1	□-917782-4*1	——	□-917782-9*1	□-917896-1	——	——	(450)
5	10.0	15.0	□-917783-1*1	□-917783-2*1	——	□-917783-6	——	□-917897-1	□-917897-2	——	(450)
6	12.5	17.5	□-917784-1*1	□-917784-2*1	——	——	□-917784-9*1	□-917898-1	——	——	(450)
7	15.0	20.0	□-917785-1*1	□-917785-2	□-917785-4*1	——	——	□-917899-1*5	3-917899-2*6	□-917899-4	(450)
8	17.5	22.5	□-917786-1*1	——	——	□-917786-6*	——	□-917900-1	——	——	(450)
9	20.0	25.0	□-917787-1*1	□-917787-2	——	——	——	——	——	——	
10	22.5	27.5	□-917788-1*1	——	——	——	——	——	——	——	
11	25.0	30.0	□-917789-1*1	——	——	——	——	——	——	——	
12	27.5	32.5	□-917790-1*1	□-917790-2	——	——	——	——	——	——	
13	30.0	35.0	□-917791-1*1	□-917791-2	——	——	——	——	——	——	

*1 Leave the □ blank, meaning it is with the boss.
Enter 2 meaning it is without the boss.
*2 Leave the □ blank, meaning it is with the boss and the kink.
Enter 1 meaning it is without the boss and the kink.
Enter 2 meaning it is with the boss and with the kink.
Note: **All part numbers are RoHS Compliant.**

*3 The blue housing 917894-6 is also available.
*4 The blue housing 917895-6 and the black housing 917895-9 are also available.
*5 Leave the □ blank, meaning it is without the boss. Enter 3 meaning it is with the boss.
*6 It is without the boss.

Note: **Dimensions shown are metric.**

Catalog 82181
Revised 4-08

https://cwindustrial.co.za/

Dimensions are in inches and millimeters unless otherwise specified. Values in brackets are metric equivalents.

Dimensions are shown for reference purposes only. Specifications subject to change.

USA: 1-800-522-6752
Canada: 1-905-470-4425
Mexico: 01-800-733-8926
C. America: 52-55-1106-0803

South America: 55-11-2103-6000
Hong Kong: 852-2735-1628
Japan: 81-44-844-8013
UK: 44-8706-080-208

High Density Catalog.pdf 1 05/04/2022 13:58:29

2.5 mm Signal Double Lock (2.5 SDL) Connectors (Wire-to-Wire) (Continued)

Vertical Post Headers (For PC Board Mount)

High-Profile Type

Material and Finish

Header Housing—UL94V-0, 6/6 Nylon, glass filled, color (see chart)

Post Contact—Pre-tinned copper alloy

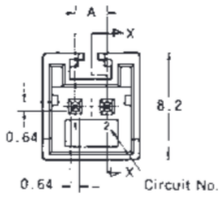

Related Product Data

Mating Plug Housings—page 13

3 to 13 Pos.

Designs of 5 pos. to 8 pos. header housings are slightly different, please request the drawings.

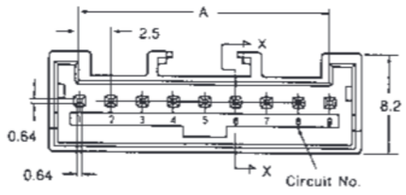

2 Pos.

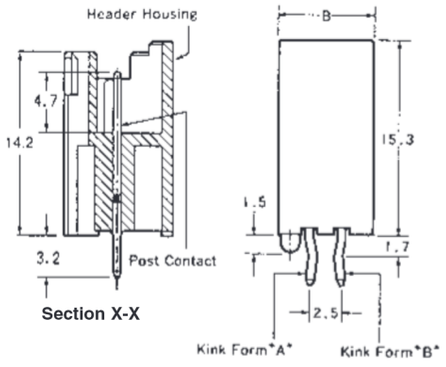

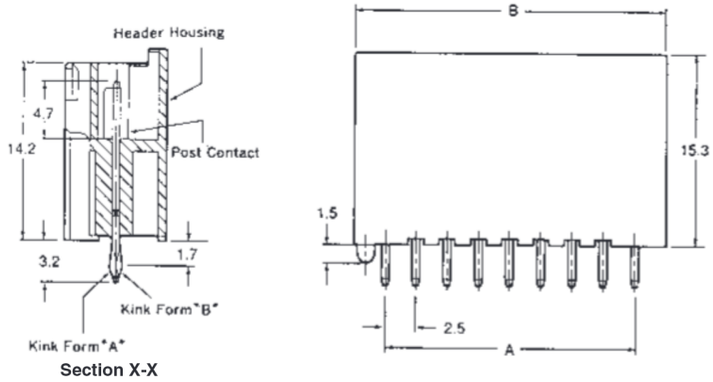

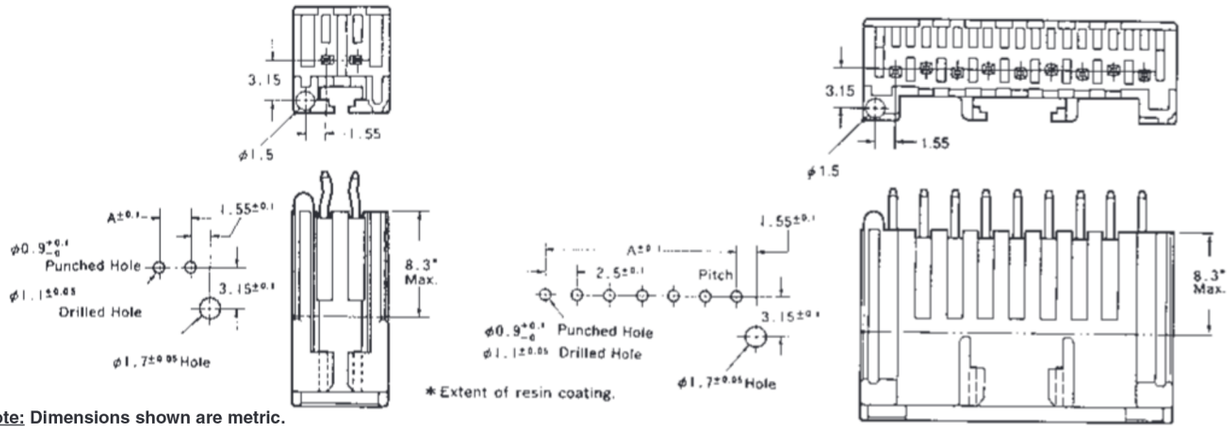

Note: Dimensions shown are metric.

No. of Pos.	Dimensions		Post Header Part Number								(Qty.)
			Loose Piece						Radial Tape-Mounted		
	A	B	Natural	Red	Yellow	Green	Blue	Black	Natural		
2	02.5	07.5	□-917722-1*1	□-917722-2*1	□-917722-4*1	□-917722-5*1	□-917722-6*1	□-917722-9*1	316221-1	(900)*2	
3	05.0	10.0	□-917723-1*1	——	——	——	——	——	316222-1	(900)	
4	07.5	12.5	□-917724-1*1	——	——	——	——	——	316223-1	(450)	
5	10.0	15.0	□-917725-1*1	——	——	——	——	——	316224-1	(450)	
6	12.5	17.5	□-917726-1*1	——	□-917726-4*1	——	□-917726-6*1	——	316225-1	(450)	
7	15.0	20.0	□-917727-1*1	——	——	——	——	——	316226-1	(450)	
8	17.5	22.5	□-917728-1*1	——	——	——	——	——	316227-1	(450)	
9	20.0	25.0	□-917729-1*1	——	——	——	——	——	——		
10	22.5	27.5	□-917730-1*1	——	——	——	——	——	——		
11	25.0	30.0	□-917731-1*1	——	——	——	——	——	——		
12	27.5	32.5	□-917732-1*1	——	——	——	——	——	——		
13	30.0	35.0	□-917733-1*1	——	——	——	——	——	——		

*1 Leave the □ blank, meaning it is with the boss. Enter 2 meaning it is without the boss.

*2 The red housing 316221-2 and the yellow housing 316221-4 and the green housing 316221-5 and the blue housing 316221-6 and the black housing 316221-9 are also available.

Note: All part numbers are RoHS Compliant.

Catalog 82181
Revised 4-08

https://cwindustrial.co.za/

Dimensions are in inches and millimeters unless otherwise specified. Values in brackets are metric equivalents.

Dimensions are shown for reference purposes only. Specifications subject to change.

USA: 1-800-522-6752
Canada: 1-905-470-4425
Mexico: 01-800-733-8926
C. America: 52-55-1106-0803

South America: 55-11-2103-6000
Hong Kong: 852-2735-1628
Japan: 81-44-844-8013
UK: 44-8706-080-208

High Density Catalog.pdf 1 05/04/2022 14:00:10

Micro MATE-N-LOK 3 mm Connector System

Product Facts

- Wire-to-wire and wire-to-board pin and receptacle connector system
- Contacts are on 3 mm [.118] centerline spacing
- 2-12 contact positions – single row
- 2-24 contact positions – dual row
- Panel mount or free-hanging wire-to-wire configurations
- Dual beam contact design for reliable interconnection
- Contacts accept 24-20 [0.2-0.6] and 30-26 [0.05-0.15] AWG wire with insulation diameter of .060 [1.52] maximum
- Contacts available in strip form or loose piece
- Pcb mount pin header assemblies in both vertical and right-angle styles
- Surface mount or through-hole pcb pin header attachment
- Pcb headers are IR reflow process compatible
- Recognized under the Component Program of Underwriters Laboratories Inc. c UL us to US and Canadian Standards, File No. E28476
- Passed Tests for VDE under Registration Number 40005280/Continuous Surveillance

Performance Characteristics

Voltage Rating—250 vac

Current Rating—5 amp max. on 20 AWG wire

Contact Resistance—20 milliohms max. final

Dielectric Withstanding Voltage—1500 VAC

Insulation Resistance—1000 megohms min.

Operating Temperature— -40°C to +105°C

Mating Force—1.5lb [6.67N] max per contact

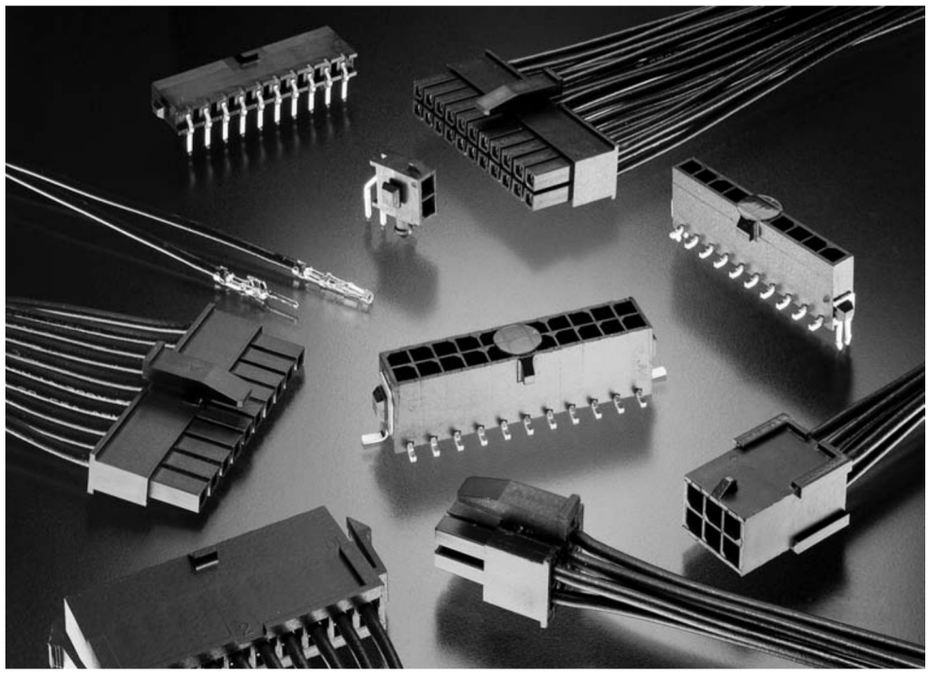

The Micro MATE-N-LOK 3 mm Connector System is a wire-to-wire and wire-to-board connector system with contacts on a 3 mm [.118] centerline. Both single-row and dual-row configurations are available. Crimp, snap-in pin and receptacle contacts are used to terminate 24-20 [0.2-0.6] and 30-26 [0.05-0.15] AWG wire. Plug and receptacle housings allow wire-to-wire and wire-to-panel configurations.

Header assemblies for wire-to-board interconnections include vertical and right-angle components. These IR reflow process compatible headers are available in through-hole and surface mount configurations.

Typical uses of the Micro MATE-N-LOK 3 mm Connector System include the appliance, instrumentation, industrial machinery, home equipment, and security system industries.

Technical Documents

Application Specification

114-13000 Micro MATE-N-LOK Connectors

Product Specification

108-1836 3 mm Micro MATE-N-LOK Connector

Catalog 82181
Revised 4-08

https://cwindustrial.co.za/

Dimensions are in inches and millimeters unless otherwise specified. Values in brackets are metric equivalents.

Dimensions are shown for reference purposes only. Specifications subject to change.

USA: 1-800-522-6752
Canada: 1-905-470-4425
Mexico: 01-800-733-8926
C. America: 52-55-1106-0803

South America: 55-11-2103-6000
Hong Kong: 852-2735-1628
Japan: 81-44-844-8013
UK: 44-8706-080-208

High Density Catalog.pdf 1 05/04/2022 14:00:29

Micro MATE-N-LOK 3 mm Connector System (Continued)

Connector Application 19-21
Crimp, Snap-In Contacts 22

Receptacle Housings
Single Row 23
Dual Row 24

Plug Housings
Single Row, Free-Hanging 25
Single Row, Panel Mount 26
Dual Row, Free-Hanging 27
Dual Row, Panel Mount 28

Vertical Header Assemblies
Low Profile Receptacle Housings,
Right Angle Surface Mount Housings 29
Single Row, Through-Hole, with Retention Feature
on Soldertail and Polarization Feature to PCB 30
Single Row, Through-Hole, with Metal Through-Hole Hold-down 31
Single Row, Surface Mount, with Metal Through-Hole Hold-down 32
Single Row, Surface Mount, with Surface Mount Hold-down 33
Dual Row, Through-Hole, with Retention Feature on Soldertail 34
Dual Row, Through-Hole, with Retention Feature
on Soldertail and Metal Through-Hole Hold-down 35
Dual Row, Surface Mount, with Metal Through-Hole Hold-down 36
Dual Row, Surface Mount, with Surface Mount Hold-down 37

Right-Angle Header Assemblies
Single Row, Through-Hole, with Metal Through-Hole Hold-down 38
Single Row, Through-Hole, with Plastic Boardlock 39
Single Row, Surface Mount, with Metal Through-Hole Hold-down 40
Single Row, Surface Mount, with Surface Mount Hold-down 41
Single Row, Surface Mount, with Plastic Boardlock 42
Dual Row, Through-Hole, with Metal Through-Hole Hold-down 43
Dual Row, Through-Hole, with Plastic Boardlock 44
Dual Row, Surface Mount, with Metal Through-Hole Hold-down 45
Dual Row, Surface Mount, with Plastic Boardlock 46
Dual Row, Surface Mount, with Surface Mount Hold-down 47

Current Rating Verification for 30˚C Maximum Temperature Rise 100% Energized

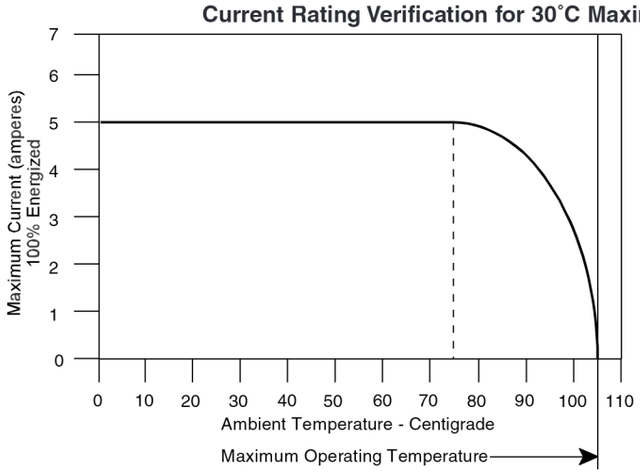

Number of Circuit Positions	Multiplication Factor Wire Size (AWG)	
	28	20
2 to 6	0.40	1
8 to 20	0.40	0.85
22 to 24	0.36	0.85

To determine acceptable current carrying capacity for connector size and wire gage indicated, use the Multiplication Factor from the chart above and multiply it times the Base rated Current at the maximum ambient operating temperature shown in the current rating figure.

Catalog 82181
Revised 4-08

https://cwindustrial.co.za/

Dimensions are in inches and millimeters unless otherwise specified. Values in brackets are metric equivalents.

Dimensions are shown for reference purposes only. Specifications subject to change.

USA: 1-800-522-6752
Canada: 1-905-470-4425
Mexico: 01-800-733-8926
C. America: 52-55-1106-0803

South America: 55-11-2103-6000
Hong Kong: 852-2735-1628
Japan: 81-44-844-8013
UK: 44-8706-080-208

High Density Catalog.pdf 1 05/04/2022 14:00:53

Micro MATE-N-LOK 3 mm Connector System (Continued)

Connector Application — Wire-to-Wire and Wire-to-Panel

Single Row

Receptacle		Plug	
Contact	Housing	Contact	Housing
	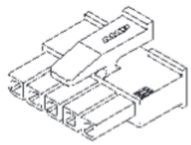		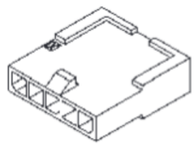 Free-Hanging □-1445049-□ Page 25
□-794606-□, □-794607-□, □-794610-□, □-794611-□ Page 22	□-1445022-□ Page 23	□-794608-□, □-794609-□, □-794612-□, □-794613-□ Page 22	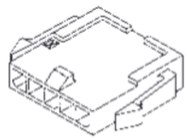 Panel Mount □-1445048-□ Page 26

Dual Row

Receptacle		Plug	
Contact	Housing	Contact	Housing
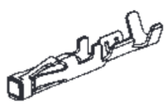	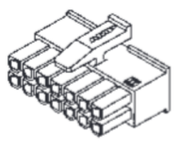		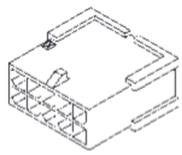 Free-Hanging □-794616-□ Page 27
□-794606-□, □-794607-□, □-794610-□, □-794611-□ Page 22	□-794617-□ Page 24	□-794608-□, □-794609-□, □-794612-□, □-794613-□ Page 22	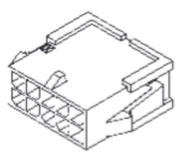 Panel Mount □-794615-□ Page 28

Catalog 82181
Revised 4-08

https://cwindustrial.co.za/

Dimensions are in inches and millimeters unless otherwise specified. Values in brackets are metric equivalents.

Dimensions are shown for reference purposes only. Specifications subject to change.

USA: 1-800-522-6752
Canada: 1-905-470-4425
Mexico: 01-800-733-8926
C. America: 52-55-1106-0803

South America: 55-11-2103-6000
Hong Kong: 852-2735-1628
Japan: 81-44-844-8013
UK: 44-8706-080-208

High Density Catalog.pdf 1 05/04/2022 14:01:09

Micro MATE-N-LOK 3 mm Connector System (Continued)

Connector Application — Wire-to-PCB

	Receptacle		Header
	Contact	Housing	
Single Row	 □-794606-□, □-794607-□, □-794610-□, □-794611-□ (Page 22)	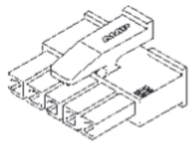 □-1445022-□ (Page 23)	 Vertical Through-Hole, with Retention Feature on Soldertail and Polarization Feature to PCB □-1445050-□, □-1445084-□, □-1445093-□ (Page 30)
			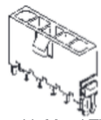 Vertical Through-Hole, with Metal Through-Hole Hold-down □-1445051-□, □-1445085-□, □-1445094-□ (Page 31)
			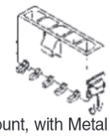 Vertical Surface Mount, with Metal Through-Hole Hold-down □-1445052-□, □-1445086-□, □-1445095-□ (Page 32)
			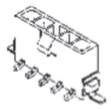 Vertical Surface Mount, with Surface Mount Hold-down □-1445053-□, □-1445087-□, □-1445096-□ (Page 33)
			 Right-angle, Through-Hole, with Metal Through-Hole Hold-down □-1445054-□, □-1445088-□, □-1445097-□ (Page 38)
			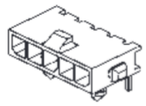 Right-angle, Through-Hole, with Plastic Boardlock □-1445055-□, □-1445089-□, □-1445098-□ (Page 39)
Low Profile, Single Row	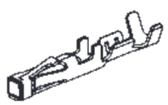 □-794606-□, □-794607-□, □-794610-□, □-794611-□ (Page 29)	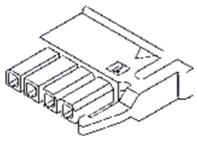 □-2029047-□, □-2029102-□, □-2029030-□, □-2029104-□, (Page 29)	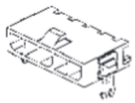 Right-angle, Surface Mount, with Metal Through-Hole Hold-down □-1445056-□, □-1445090-□, □-1445099-□ (Page 40)
			 Right-angle, Surface Mount, with Surface Mount Hold-down □-1445057-□, □-1445091-□, □-1445100-□ (Page 41)
			 Right-angle, Surface Mount, and Plastic Boardlock □-1445058-□, □-1445092-□, □-1445101-□ (Page 42)
			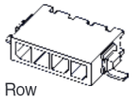 Low Profile, Single Row □-2029030-□, □-2029102-□ (Page 29)

Catalog 82181
Revised 4-08

https://cwindustrial.co.za/

Dimensions are in inches and millimeters unless otherwise specified. Values in brackets are metric equivalents.

Dimensions are shown for reference purposes only. Specifications subject to change.

USA: 1-800-522-6752
Canada: 1-905-470-4425
Mexico: 01-800-733-8926
C. America: 52-55-1106-0803

South America: 55-11-2103-6000
Hong Kong: 852-2735-1628
Japan: 81-44-844-8013
UK: 44-8706-080-208

High Density Catalog.pdf 1 05/04/2022 14:01:25

Micro MATE-N-LOK 3 mm Connector System (Continued)

Connector Application — Wire-to-PCB

Dual Row

Receptacle		Header
Contact	Housing	
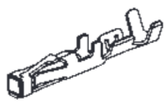	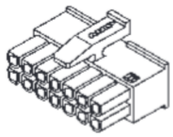	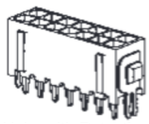 Vertical Through-Hole, with Retention Feature on Soldertail and Optional Metal Through-Hole Hold-down □-794630-□, □-794631-□, □-794632-□, (Page 34) □-794680-□, □-794681-□, □-794682-□ (Page 35)
		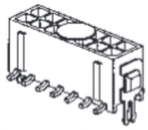 Vertical Surface Mount, with Metal Through-Hole Hold-down □-794633-□, □-794634-□, □-794635-□ (Page 36)
		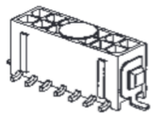 Vertical Surface Mount, with Surface Mount Hold-down □-794636-□, □-794637-□, □-794638-□ (Page 37)
□-794606-□, □-794607-□, □-794610-□, □-794611-□ (Page 22}	□-794617-□ (Page 24)	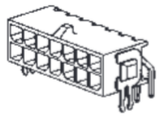 Right-angle, Through-Hole, with Metal Through-Hole Hold-down □-794677-□, □-794678-□, □-794679-□ (Page 43)
		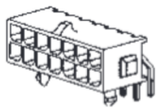 Right-angle, Through-Hole, with Plastic Boardlock □-794618-□, □-794619-□, □-794620-□ (Page 44)
		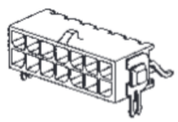 Right-angle, Surface Mount, with Metal Through-Hole Hold-down □-794624-□, □-794625-□, □-794626-□ (Page 45)
		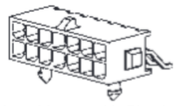 Right-angle, Surface Mount, with Plastic Boardlock □-794621-□, □-794622-□, □-794623-□ (Page 46)
		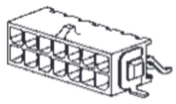 Right-angle, Surface Mount, with Surface Mount Hold-down □-794627-□, □-794628-□, □-794629-□ (Page 47)

Catalog 82181
Revised 4-08

https://cwindustrial.co.za/

Dimensions are in inches and millimeters unless otherwise specified. Values in brackets are metric equivalents.

Dimensions are shown for reference purposes only. Specifications subject to change.

USA: 1-800-522-6752
Canada: 1-905-470-4425
Mexico: 01-800-733-8926
C. America: 52-55-1106-0803

South America: 55-11-2103-6000
Hong Kong: 852-2735-1628
Japan: 81-44-844-8013
UK: 44-8706-080-208

High Density Catalog.pdf 1 05/04/2022 14:01:39

Micro MATE-N-LOK 3 mm Connector System (Continued)

Crimp, Snap-In Contacts

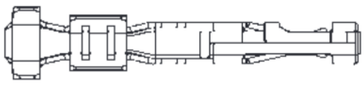

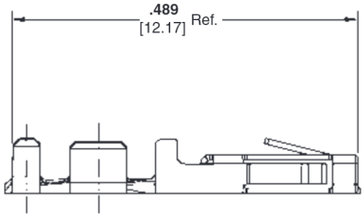

Material and Finish

Receptacle — Phosphor Bronze

Plug — Brass

Plating A — .000100 (.000254) minimum bright tin entire stock over .000050 (.000127) minimum nickel entire stock

Plating B — .000015 (.000038) minimum gold in localized gold plate area. .000100 (.000254) minimum bright tin in localized tin plate area, both over .000050 (.000127) minimum nickel on entire stock

Plating C — .000030 (.000076) minimum gold in localized gold plate area. .000100 (.000254) minimum bright tin in localized tin plate area, both over .000050 (.000127) minimum nickel on entire stock

Related Product Data

Connectors used with:

Receptacle Contacts used with Receptacle Housings — pages 23-24

Plug Contacts used with Plug Housings — pages 25-28

Application Tooling — pages 207-210

Receptacle Contacts

Wire Size Range AWG [mm²]	Ins. Dia. Range	Finish	Contact Part Numbers		Tooling Part Numbers	
			Strip Form	Loose Piece	Applicator	Hand Tool
20-24 0.50 - 0.20	**.035 - .060** 0.89-1.52	Plating A	794606-1	794610-1	680893-□*	91501-1
		Plating B	1-794606-1	1-794610-1		
		Plating C	1-794606-2	1-794610-2		
26-30 0.12 - 0.05	**.035 - .060** 0.89-1.52	Plating A	794607-1	794611-1	680894-□*	91502-1
		Plating B	1-794607-1	1-794611-1		
		Plating C	1-794607-2	1-794611-2		

*1=AMPOMATOR CLS Machine, 2=AMP-O-LECTRIC Model K Terminator, 3=AMP-O-LECTRIC Model G Terminator

Note: All part numbers are RoHS Compliant.

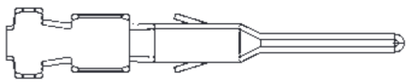

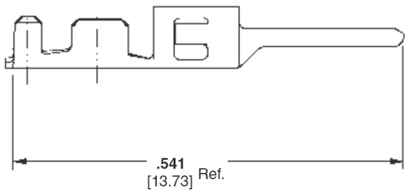

Plug Contacts

Wire Size Range AWG [mm²]	Ins. Dia. Range	Finish	Contact Part Numbers		Tooling Part Numbers	
			Strip Form	Loose Piece	Applicator	Hand Tool
20-24 0.50 - 0.20	**.035 - .060** 0.89-1.52	Plating A	1-794608-0	1-794612-0	1385194-□*	91501-1
		Plating B	1-794608-1	1-794612-1		
		Plating C	1-794608-2	1-794612-2		
26-30 0.12 -0.05	**.035 - .060** 0.89-1.52	Plating A	1-794609-0	1-794613-0	1385377-□*	91502-1
		Plating B	1-794609-1	1-794613-1		
		Plating C	1-794609-2	1-794613-2		

*1=AMPOMATOR CLS Machine, 2=AMP-O-LECTRIC Model K Terminator, 3=AMP-O-LECTRIC Model G Terminator

Note: All part numbers are RoHS Compliant.

Contact Extraction Tools

Part Number 843996-6 for Receptacle Contacts Part Number 1586344-1 for Plug Contacts

Catalog 82181
Revised 4-08

https://cwindustrial.co.za/

Dimensions are in inches and millimeters unless otherwise specified. Values in brackets are metric equivalents.

Dimensions are shown for reference purposes only. Specifications subject to change.

USA: 1-800-522-6752
Canada: 1-905-470-4425
Mexico: 01-800-733-8926
C. America: 52-55-1106-0803

South America: 55-11-2103-6000
Hong Kong: 852-2735-1628
Japan: 81-44-844-8013
UK: 44-8706-080-208

High Density Catalog.pdf 1 05/04/2022 14:01:58

Micro MATE-N-LOK 3 mm Connector System (Continued)

Receptacle Housings

Single Row

Material

Nylon, Black
Flammability Rating—UL 94V-0

Related Product Data

Contacts:

Receptacle Contacts—page 22

Mateable Housings and Headers:

Single Row Plug Housings—pages 25-26
Single Row Vertical Pin Header Assemblies—pages 30-37
Single Row Right-Angle Pin Header Assemblies—pages 38-47

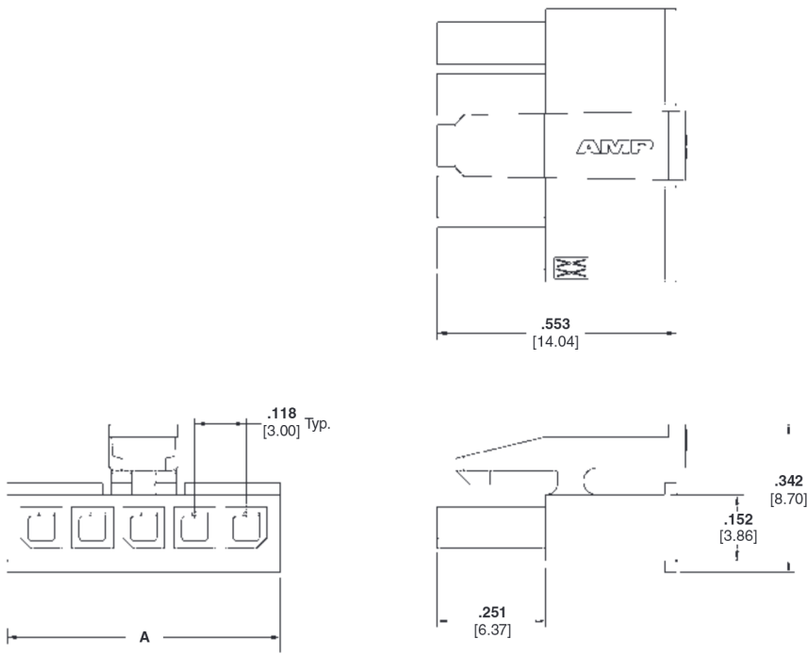

Number of Circuits	Dimension A	Part Numbers
2	**.276** 7.00	1445022-2
3	**.394** 10.00	1445022-3
4	**.512** 13.00	1445022-4
5	**.630** 16.00	1445022-5
6	**.748** 19.00	1445022-6
7	**.866** 22.00	1445022-7
8	**.984** 25.00	1445022-8
9	**1.102** 28.00	1445022-9
10	**1.220** 31.00	1-1445022-0
11	**1.339** 34.00	1-1445022-1
12	**1.457** 37.00	1-1445022-2

Note: **All part numbers are RoHS Compliant.**

Catalog 82181
Revised 4-08

https://cwindustrial.co.za/

Dimensions are in inches and millimeters unless otherwise specified. Values in brackets are metric equivalents.

Dimensions are shown for reference purposes only. Specifications subject to change.

USA: 1-800-522-6752
Canada: 1-905-470-4425
Mexico: 01-800-733-8926
C. America: 52-55-1106-0803

South America: 55-11-2103-6000
Hong Kong: 852-2735-1628
Japan: 81-44-844-8013
UK: 44-8706-080-208

High Density Catalog.pdf 1 05/04/2022 14:02:15

Micro MATE-N-LOK 3 mm Connector System (Continued)

Receptacle Housings
(Continued)

Dual Row

Material
Nylon, Black
Flammability Rating—UL 94V-0

Related Product Data
Contacts:
Receptacle Contacts—page 22

Mateable Housings and Headers:
Dual Row Plug Housings—pages 27-28
Dual Row Vertical Pin Header Assemblies—pages 34-37
Dual Row Right-Angle Pin Header Assemblies—pages 43-47

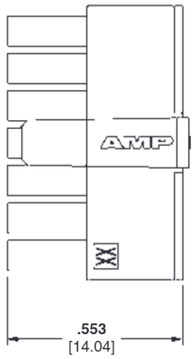

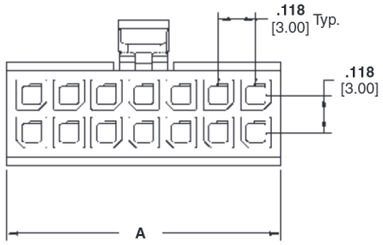

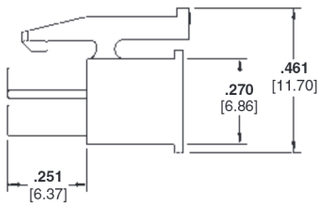

Number of Circuits	Dimension A	Part Numbers
2	**.157** 4.00	794617-2
4	**.276** 7.00	794617-4
6	**.394** 10.00	794617-6
8	**.512** 13.00	794617-8
10	**.630** 16.00	1-794617-0
12	**.748** 19.00	1-794617-2
14	**.866** 22.00	1-794617-4
16	**.984** 25.00	1-794617-6
18	**1.102** 28.00	1-794617-8
20	**1.220** 31.00	2-794617-0
22	**1.339** 34.00	2-794617-2
24	**1.457** 37.00	2-794617-4

Note: All part numbers are RoHS Compliant.

High Density Catalog.pdf 1 05/04/2022 14:02:34

Micro MATE-N-LOK 3 mm Connector System (Continued)

Plug Housings

Single Row, Free-Hanging

Material

Nylon, Black
Flammability Rating—UL 94V-0

Related Product Data

Contacts:

Plug Contacts—page 22

Mateable Housings:

Single Row Receptacle Housings—page 23

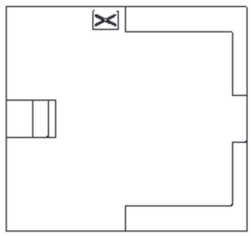

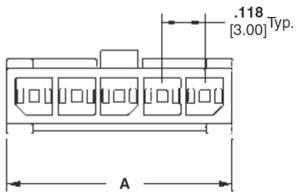

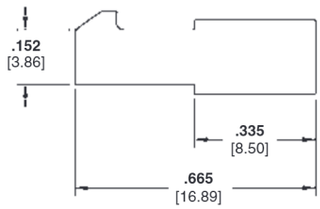

Number of Circuits	Dimension A	Part Numbers
2	**.270** 6.85	1445049-2
3	**.388** 9.85	1445049-3
4	**.506** 12.85	1445049-4
5	**.624** 15.85	1445049-5
6	**.742** 18.85	1445049-6
7	**.860** 21.85	1445049-7
8	**.978** 24.85	1445049-8
9	**1.096** 27.85	1445049-9
10	**1.215** 30.85	1-1445049-0
11	**1.333** 33.85	1-1445049-1
12	**1.451** 36.85	1-1445049-2

Note: **All part numbers are RoHS Compliant.**

Catalog 82181
Revised 4-08

https://cwindustrial.co.za/

Dimensions are in inches and millimeters unless otherwise specified. Values in brackets are metric equivalents.

Dimensions are shown for reference purposes only. Specifications subject to change.

USA: 1-800-522-6752
Canada: 1-905-470-4425
Mexico: 01-800-733-8926
C. America: 52-55-1106-0803

South America: 55-11-2103-6000
Hong Kong: 852-2735-1628
Japan: 81-44-844-8013
UK: 44-8706-080-208

High Density Catalog.pdf 1 05/04/2022 14:02:55

Micro MATE-N-LOK 3 mm Connector System (Continued)

Plug Housings (Continued)

Single Row, Panel Mount

Material

Nylon, Black
Flammability Rating—UL 94V-0

Related Product Data

Contacts:

Plug Contacts—page 22

Mateable Housings:

Single Row Receptacle Housings—page 23

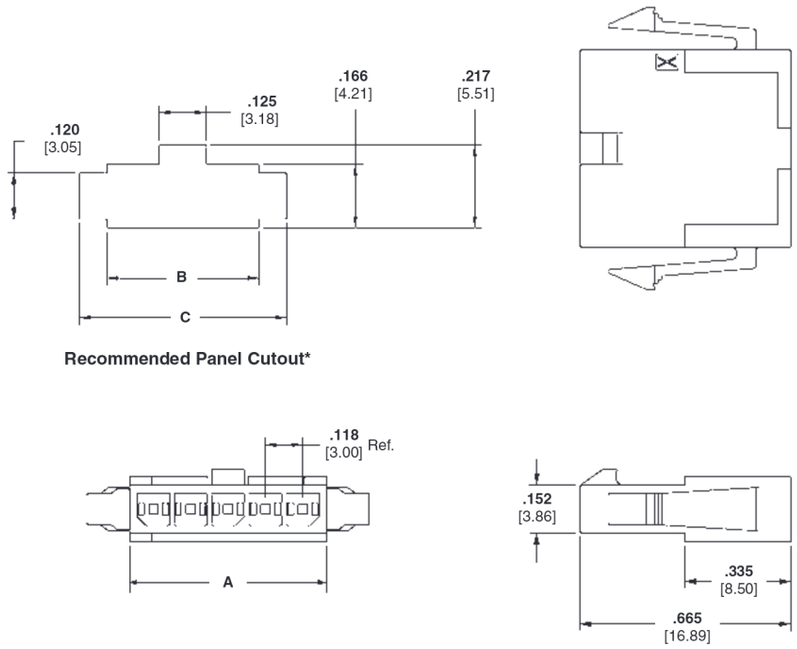

Recommended Panel Cutout*

Number of Circuits	Dimensions A	B	C	Part Numbers
2	**.270** 6.85	**.283** 7.20	**.428** 10.88	1445048-2
3	**.388** 9.85	**.402** 10.20	**.546** 13.88	1445048-3
4	**.506** 12.85	**.520** 13.20	**.665** 16.88	1445048-4
5	**.624** 15.85	**.638** 16.20	**.783** 19.88	1445048-5
6	**.742** 18.85	**.756** 19.20	**.901** 22.88	1445048-6
7	**.860** 21.85	**.874** 22.20	**1.019** 25.88	1445048-7
8	**.978** 24.85	**.992** 25.20	**1.137** 28.88	1445048-8
9	**1.096** 27.85	**1.110** 28.20	**1.255** 31.88	1445048-9
10	**1.215** 30.85	**1.228** 31.20	**1.373** 34.88	1-1445048-0
11	**1.333** 33.85	**1.346** 34.20	**1.491** 37.88	1-1445048-1
12	**1.451** 36.85	**1.465** 37.20	**1.609** 40.88	1-1445048-2

*Recommended panel thickness .062-.091 [1.57-2.30]. Always consult customer drawing for panel cutout dimensions.

Note: All part numbers are RoHS Compliant.

High Density Catalog.pdf 1 05/04/2022 14:03:18

Micro MATE-N-LOK 3 mm Connector System (Continued)

Plug Housings (Continued)

Dual Row, Free-Hanging

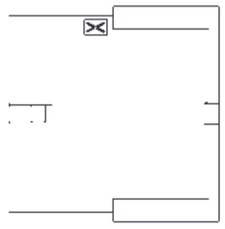

Material

Nylon, Black
Flammability Rating—UL 94V-0

Related Product Data

Contacts:

Plug Contacts—page 22

Mateable Housings:

Dual Row Receptacle Housings—page 24

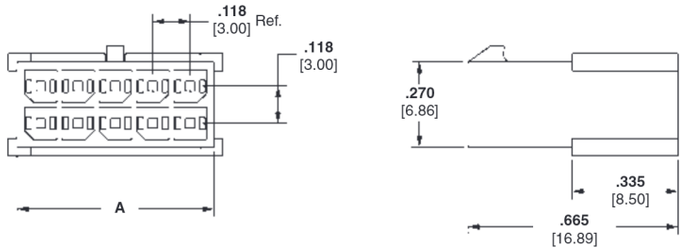

Number of Circuits	Dimension A	Part Numbers
2	**.157** 3.85	794616-2
4	**.276** 6.85	794616-4
6	**.394** 9.85	794616-6
8	**.512** 12.85	794616-8
10	**.630** 15.85	1-794616-0
12	**.748** 18.85	1-794616-2
14	**.866** 21.85	1-794616-4
16	**.984** 24.85	1-794616-6
18	**1.102** 27.85	1-794616-8
20	**1.220** 30.85	2-794616-0
22	**1.339** 33.85	2-794616-2
24	**1.457** 36.85	2-794616-4

Note: All part numbers are RoHS Compliant.

Catalog 82181
Revised 4-08

https://cwindustrial.co.za/

Dimensions are in inches and millimeters unless otherwise specified. Values in brackets are metric equivalents.

Dimensions are shown for reference purposes only. Specifications subject to change.

USA: 1-800-522-6752
Canada: 1-905-470-4425
Mexico: 01-800-733-8926
C. America: 52-55-1106-0803

South America: 55-11-2103-6000
Hong Kong: 852-2735-1628
Japan: 81-44-844-8013
UK: 44-8706-080-208

High Density Catalog.pdf 1 05/04/2022 14:03:33

Micro MATE-N-LOK 3 mm Connector System (Continued)

Plug Housings (Continued)

Dual Row, Panel Mount

Material

Nylon, Black
Flammability Rating—UL 94V-0

Related Product Data

Contacts:

Plug Contacts—page 22

Mateable Housings:

Dual Row Receptacle Housings—page 24

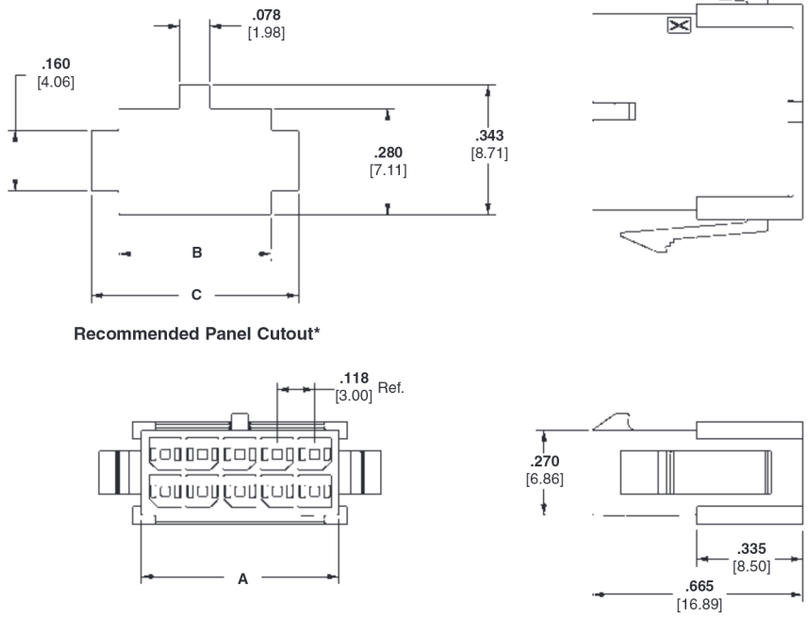

Recommended Panel Cutout*

Number of Circuits	Dimensions A	B	C	Part Numbers
2	**.157** 3.85	**.165** 4.20	**.310** 7.88	794615-2
4	**.276** 6.85	**.285** 7.20	**.428** 10.88	794615-4
6	**.394** 9.85	**.402** 10.20	**.546** 13.88	794615-6
8	**.512** 12.85	**.520** 13.20	**.665** 16.88	794615-8
10	**.630** 15.85	**.638** 16.20	**.783** 19.88	1-794615-0
12	**.748** 18.85	**.756** 19.20	**.901** 22.88	1-794615-2
14	**.866** 21.85	**.874** 22.20	**1.019** 25.88	1-794615-4
16	**.984** 24.85	**.992** 25.20	**1.137** 28.88	1-794615-6
18	**1.102** 27.85	**1.110** 28.20	**1.255** 31.88	1-794615-8
20	**1.220** 30.85	**1.228** 31.20	**1.373** 34.88	2-794615-0
22	**1.339** 33.85	**1.346** 34.20	**1.491** 37.88	2-794615-2
24	**1.457** 36.85	**1.469** 37.20	**1.609** 40.88	2-794615-4

*Recommended panel thickness .062-.091 [1.57-2.30]. Always consult customer drawing for panel cutout dimensions.

Note: All part numbers are RoHS Compliant.

High Density Catalog.pdf 1 05/04/2022 14:03:49

Micro MATE-N-LOK 3 mm Connector System (Continued)

New: Low Profile

Low Profile Receptacle Housings

Material

Nylon, Black
Flammability Rating—V0

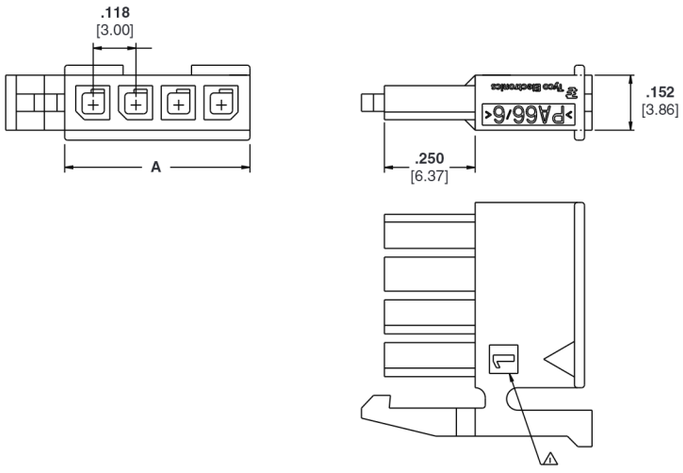

Positions	Color	Dimension A	Part Numbers
2	Black	.276 7	2029047-2
3	Black	.394 10	2029047-3
4	Black	.512 13	2029047-4
2	Natural	.276 7	2029102-2
3	Natural	.394 10	2029102-3
4	Natural	.512 13	2029102-4

Low Profile Right Angle Surface Mount Housings

Material

Hight Temp Nylon, Black
Flammability Rating—V0

Contacts:

Brass
Plating A — .0001100 (.00254) minimum tin over .000050 [0.00127] minimum nickel

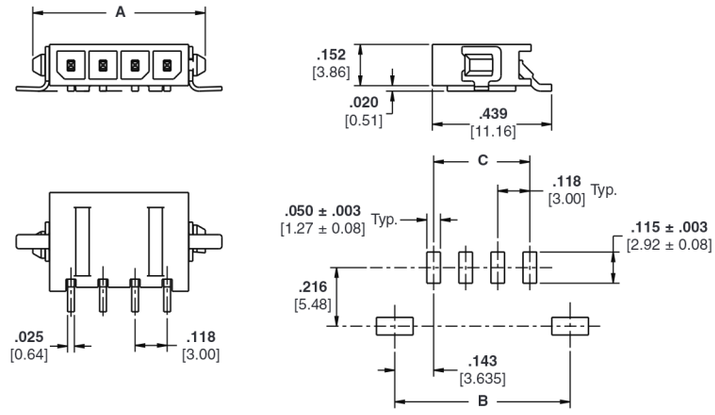

Positions	Color	Dimensions A	Dimensions B	Dimensions C	Part Numbers
2	Black	.394 10	.410 10.4	.118 3	2029030-2
3	Black	.512 13	.528 13.4	.263 6	2029030-3
4	Black	.630 16	.646 16.4	.354 9	2029030-4
2	Natural	.394 10	.410 10.4	.118 3	2029104-2
3	Natural	.512 13	.52 13.4	.263 6	2029104-3
4	Natural	.630 16	.646 16.4	.354 9	2029104-4

Note: **Less than 4.7mm in vertical board surface height required!**

Catalog 82181
Revised 4-08

https://cwindustrial.co.za/

Dimensions are in inches and millimeters unless otherwise specified. Values in brackets are metric equivalents.

Dimensions are shown for reference purposes only. Specifications subject to change.

USA: 1-800-522-6752
Canada: 1-905-470-4425
Mexico: 01-800-733-8926
C. America: 52-55-1106-0803

South America: 55-11-2103-6000
Hong Kong: 852-2735-1628
Japan: 81-44-844-8013
UK: 44-8706-080-208

High Density Catalog.pdf 1 05/04/2022 14:04:09

Micro MATE-N-LOK 3 mm Connector System (Continued)

Vertical Header Assemblies

Single Row, Through-Hole, with Retention Feature on Soldertail and Polarization Feature to PCB

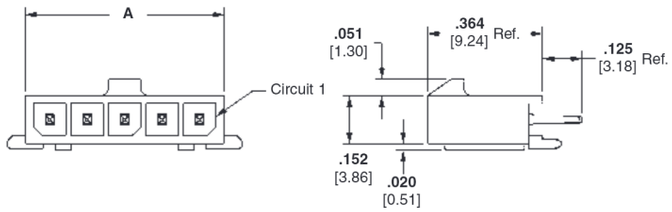

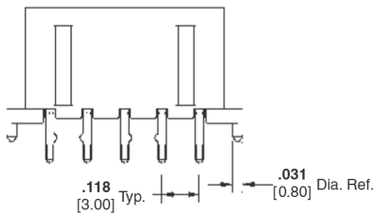

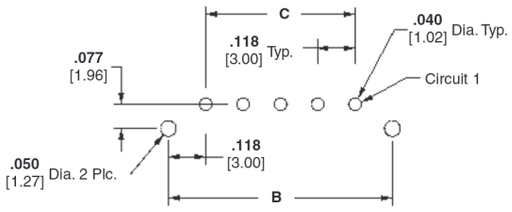

Recommended PC Board Layout*

Material and Finish

Housing — High Temperature Nylon, Black

Flammability Rating — UL 94V-0

Contacts — Brass

Plating A—.000100 [0.00254] min. tin over .000050 [0.00127] min. nickel

Plating B—.000015 [0.00038] gold in mating area, .000100 [0.00254] min. tin in solder area, with entire contact underplated .000050 [0.00127] min. nickel

Plating C—.000030 [0.00076] gold in mating area, .000100 [0.00254] min. tin in solder area, with entire contact underplated .000050 [0.00127] min. nickel

Related Product Data

Mateable Housings:

Single Row Receptacle Housings—page 23

Number of Circuits	Dimensions			Header Part Numbers			Mates with Receptacle Housing Part Number
	A	B	C	Plating A	Plating B	Plating C	
2	**.276** 7.00	**.360** 9.14	**.118** 3.00	2-1445050-2	2-1445084-2	2-1445093-2	1445022-2
3	**.394** 10.00	**.478** 12.14	**.236** 6.00	2-1445050-3	2-1445084-3	2-1445093-3	1445022-3
4	**.512** 13.00	**.596** 15.14	**.354** 9.00	2-1445050-4	2-1445084-4	2-1445093-4	1445022-4
5	**.630** 16.00	**.714** 18.14	**.472** 12.00	2-1445050-5	2-1445084-5	2-1445093-5	1445022-5
6	**.748** 19.00	**.832** 21.14	**.591** 15.00	2-1445050-6	2-1445084-6	2-1445093-6	1445022-6
7	**.866** 22.00	**.950** 24.14	**.709** 18.00	2-1445050-7	2-1445084-7	2-1445093-7	1445022-7
8	**.984** 25.00	**1.069** 27.14	**.827** 21.00	2-1445050-8	2-1445084-8	2-1445093-8	1445022-8
9	**1.102** 28.00	**1.187** 30.14	**.945** 24.00	2-1445050-9	2-1445084-9	3-1445093-9	1445022-9
10	**1.220** 31.00	**1.304** 33.14	**1.063** 27.00	3-1445050-0	3-1445084-0	3-1445093-0	1-1445022-0
11	**1.339** 34.00	**1.423** 36.14	**1.181** 30.00	3-1445050-1	3-1445084-1	3-1445093-1	1-1445022-1
12	**1.457** 37.00	**1.541** 39.14	**1.299** 33.00	3-1445050-2	3-1445084-2	3-1445093-2	1-1445022-2

*Recommended PC Board thickness .062 [1.57]. Always consult customer drawing for PC Board layout dimensions.

Note: All part numbers are RoHS Compliant.

Catalog 82181
Revised 4-08

https://cwindustrial.co.za/

Dimensions are in inches and millimeters unless otherwise specified. Values in brackets are metric equivalents.

Dimensions are shown for reference purposes only. Specifications subject to change.

USA: 1-800-522-6752
Canada: 1-905-470-4425
Mexico: 01-800-733-8926
C. America: 52-55-1106-0803

South America: 55-11-2103-6000
Hong Kong: 852-2735-1628
Japan: 81-44-844-8013
UK: 44-8706-080-208

High Density Catalog.pdf 1 05/04/2022 14:04:30

Micro MATE-N-LOK 3 mm Connector System (Continued)

Vertical Header Assemblies

(Continued)

Single Row, Through-Hole, with Metal Through-Hole Hold-down

Material and Finish

Housing — High Temperature Nylon, Black

Flammability Rating — UL 94V-0

Contacts—Brass

Plating A—.000100 [0.00254] min. tin over .000050 [0.00127] min. nickel

Plating B—.000015 [0.00038] gold in mating area, .000100 [0.00254] min. tin in solder area, with entire contact underplated .000050 [0.00127] min. nickel

Plating C—.000030 [0.00076] gold in mating area, .000100 [0.00254] min. tin in solder area, with entire contact underplated .000050 [0.00127] min. nickel

Hold-downs—Phosphor Bronze, .000100 [0.00254] min. tin over .000050 [0.00127] min. nickel

Related Product Data

Mateable Housings:

Single Row Receptacle Housing—page 23

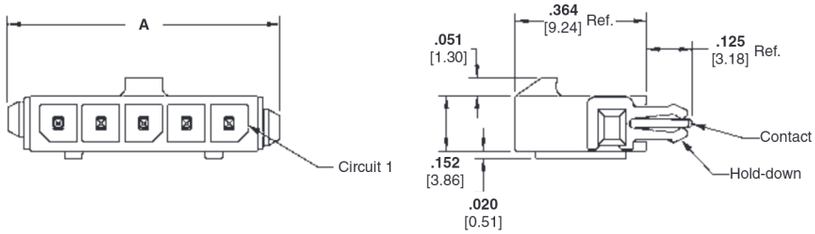

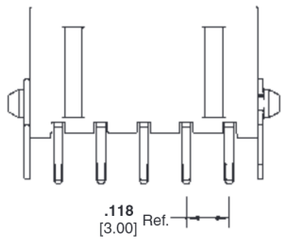

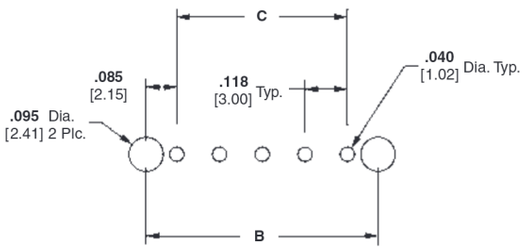

Recommended PC Board Layout*

Number of Circuits	Dimensions			Header Part Numbers			Mates with Receptacle Housing Part Number
	A	B	C	Plating A	Plating B	Plating C	
2	.399 10.14	.293 7.43	.118 3.00	2-1445051-2	2-1445085-2	2-1445094-2	1445022-2
3	.517 13.14	.411 10.43	.236 6.00	2-1445051-3	2-1445085-3	2-1445094-3	1445022-3
4	.635 16.14	.529 13.43	.354 9.00	2-1445051-4	2-1445085-4	2-1445094-4	1445022-4
5	.754 19.14	.647 16.43	.472 12.00	2-1445051-5	2-1445085-5	2-1445094-5	1445022-5
6	.871 22.14	.765 19.43	.591 15.00	2-1445051-6	2-1445085-6	2-1445094-6	1445022-6
7	.990 25.14	.883 22.43	.709 18.00	2-1445051-7	2-1445085-7	2-1445094-7	1445022-7
8	1.108 28.14	1.001 25.43	.827 21.00	2-1445051-8	2-1445085-8	2-1445094-8	1445022-8
9	1.226 31.14	1.119 28.43	.945 24.00	2-1445051-9	2-1445085-9	2-1445094-9	1445022-9
10	1.344 34.14	1.237 31.43	1.063 27.00	3-1445051-0	3-1445085-0	3-1445094-0	1-1445022-0
11	1.462 37.14	1.356 34.43	1.181 30.00	3-1445051-1	3-1445085-1	3-1445094-1	1-1445022-1
12	1.580 40.14	1.474 37.43	1.299 33.00	3-1445051-2	3-1445085-2	3-1445094-2	1-1445022-2

*Recommended PC Board thickness .062 [1.57]. Always consult customer drawing for PC Board layout dimensions.

Note: All part numbers are RoHS Compliant.

Catalog 82181
Revised 4-08

https://cwindustrial.co.za/

Dimensions are in inches and millimeters unless otherwise specified. Values in brackets are metric equivalents.

Dimensions are shown for reference purposes only. Specifications subject to change.

USA: 1-800-522-6752
Canada: 1-905-470-4425
Mexico: 01-800-733-8926
C. America: 52-55-1106-0803

South America: 55-11-2103-6000
Hong Kong: 852-2735-1628
Japan: 81-44-844-8013
UK: 44-8706-080-208

High Density Catalog.pdf 1 05/04/2022 14:04:47

Micro MATE-N-LOK 3 mm Connector System (Continued)

Vertical Header Assemblies
(Continued)

Single Row, Surface Mount, with Metal Through-Hole Hold-down

Material and Finish

Housing — High Temperature Nylon, Black

Flammability Rating — UL 94V-0

Contacts—Brass

Plating A—.000100 [0.00254] min. tin over .000050 [0.00127] min. nickel

Plating B—.000015 [0.00038] gold in mating area, .000100 [0.00254] min. tin in solder area, with entire contact underplated .000050 [0.00127] min. nickel

Plating C—.000030 [0.00076] gold in mating area, .000100 [0.00254] min. tin in solder area, with entire contact underplated .000050 [0.00127] min. nickel

Hold-downs—Phosphor Bronze, .000100 [0.00254] min. tin over .000050 [0.00127] min. nickel

Related Product Data

Mateable Housings:

Single Row Receptacle Housing—page 23

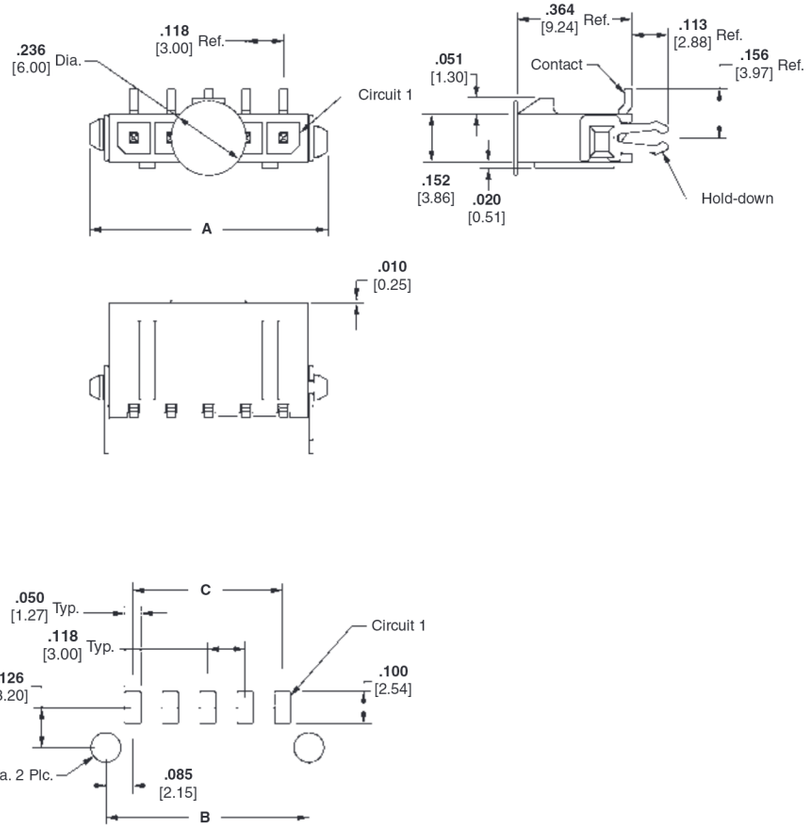

Recommended PC Board Layout*

Number of Circuits	Dimensions			Header Part Numbers			Mates with Receptacle Housing Part Number
	A	B	C	Plating A	Plating B	Plating C	
2	**.394** 10.00	**.293** 7.43	**.118** 3.00	2-1445052-2	2-1445086-2	2-1445095-2	1445022-2
3	**.512** 13.00	**.411** 10.43	**.236** 6.00	2-1445052-3	2-1445086-3	2-1445095-3	1445022-3
4	**.630** 16.00	**.529** 13.43	**.354** 9.00	2-1445052-4	2-1445086-4	2-1445095-4	1445022-4
5	**.748** 19.00	**.647** 16.43	**.472** 12.00	2-1445052-5	2-1445086-5	2-1445095-5	1445022-5
6	**.866** 22.00	**.765** 19.43	**.591** 15.00	2-1445052-6	2-1445086-6	2-1445095-6	1445022-6
7	**.984** 25.00	**.883** 22.43	**.709** 18.00	2-1445052-7	2-1445086-7	2-1445095-7	1445022-7
8	**1.102** 28.00	**1.001** 25.43	**.827** 21.00	2-1445052-8	2-1445086-8	2-1445095-8	1445022-8
9	**1.220** 31.00	**1.119** 28.43	**.945** 24.00	2-1445052-9	2-1445086-9	2-1445095-9	1445022-9
10	**1.339** 34.00	**1.237** 31.43	**1.063** 27.00	3-1445052-0	3-1445086-0	3-1445095-0	1-1445022-0
11	**1.457** 37.00	**1.356** 34.43	**1.181** 30.00	3-1445052-1	3-1445086-1	3-1445095-1	1-1445022-1
12	**1.575** 40.00	**1.474** 37.43	**1.299** 33.00	3-1445052-2	3-1445086-2	3-1445095-2	1-1445022-2

*Recommended PC Board thickness .062 [1.57]. Always consult customer drawing for PC Board layout dimensions.

Note: All part numbers are RoHS Compliant.

High Density Catalog.pdf 1 05/04/2022 14:05:08

Micro MATE-N-LOK 3 mm Connector System (Continued)

Vertical Header Assemblies
(Continued)

Single Row, Surface Mount, with Surface Mount Hold-down

Material and Finish

Housing — High Temperature Nylon, Black

Flammability Rating — UL 94V-0

Contacts—Brass

Plating A—.000100 [0.00254] min. tin over .000050 [0.00127] min. nickel

Plating B—.000015 [0.00038] gold in mating area, .000100 [0.00254] min. tin in solder area, with entire contact underplated .000050 [0.00127] min. nickel

Plating C—.000030 [0.00076] gold in mating area, .000100 [0.00254] min. tin in solder area, with entire contact underplated .000050 [0.00127] min. nickel

Hold-downs—Phosphor Bronze, .000100 [0.00254] min. tin over .000050 [0.00127] min. nickel

Related Product Data

Mateable Housings:

Single Row Receptacle Housing—page 23

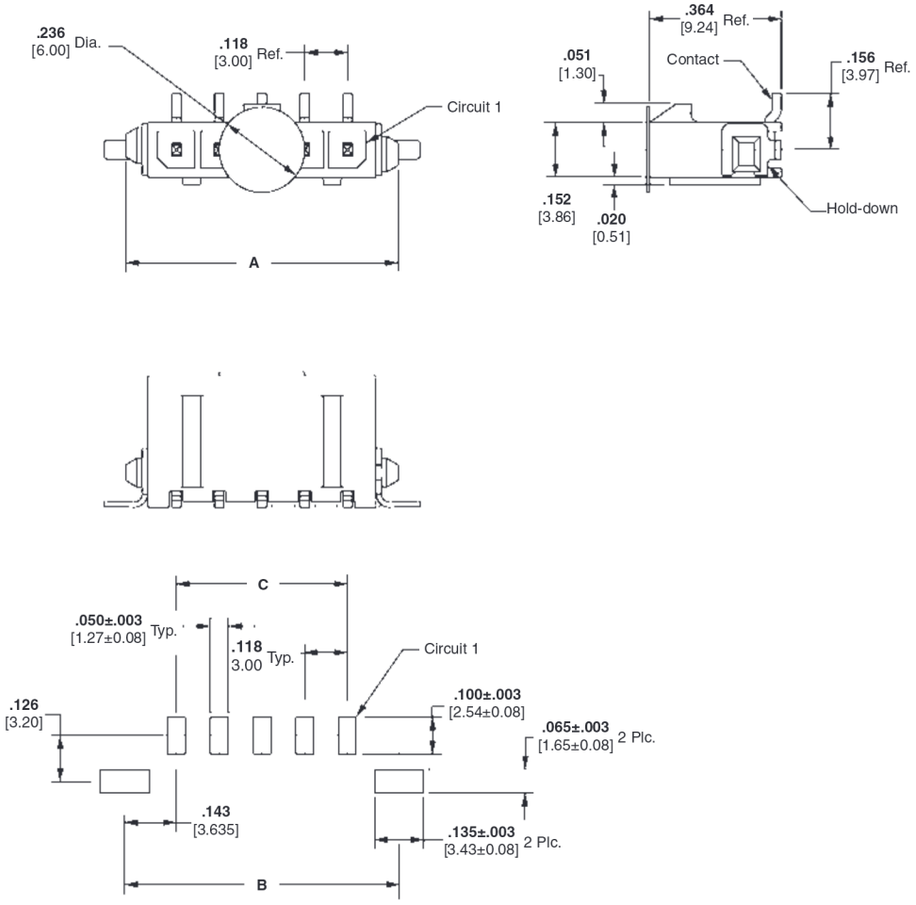

Recommended PC Board Layout*

Number of Circuits	Dimensions			Header Part Numbers			Mates with Receptacle Housing Part Number
	A	B	C	Plating A	Plating B	Plating C	
2	**.394** 10.00	**.410** 10.41	**.118** 3.00	2-1445053-2	2-1445087-2	2-1445096-2	1445022-2
3	**.512** 13.00	**.528** 13.41	**.236** 6.00	2-1445053-3	2-1445087-3	2-1445096-3	1445022-3
4	**.630** 16.00	**.646** 16.41	**.354** 9.00	2-1445053-4	2-1445087-4	2-1445096-4	1445022-4
5	**.748** 19.00	**.765** 19.41	**.472** 12.00	2-1445053-5	2-1445087-5	2-1445096-5	1445022-5
6	**.866** 22.00	**.882** 22.41	**.591** 15.00	2-1445053-6	2-1445087-6	2-1445096-6	1445022-6
7	**.984** 25.00	**1.001** 25.41	**.709** 18.00	2-1445053-7	2-1445087-7	2-1445096-7	1445022-7
8	**1.102** 28.00	**1.119** 28.41	**.827** 21.00	2-1445053-8	2-1445087-8	2-1445096-8	1445022-8
9	**1.220** 31.00	**1.237** 31.41	**.945** 24.00	2-1445053-9	2-1445087-9	2-1445096-9	1445022-9
10	**1.339** 34.00	**1.355** 34.41	**1.063** 27.00	3-1445053-0	3-1445087-0	3-1445096-0	1-1445022-0
11	**1.457** 37.00	**1.473** 37.41	**1.181** 30.00	3-1445053-1	3-1445087-1	3-1445096-1	1-1445022-1
12	**1.575** 40.00	**1.591** 40.41	**1.299** 33.00	3-1445053-2	3-1445087-2	3-1445096-2	1-1445022-2

*Always consult customer drawing for PC Board layout dimensions.

Note: All part numbers are RoHS Compliant.

Catalog 82181
Revised 4-08

https://cwindustrial.co.za/

Dimensions are in inches and millimeters unless otherwise specified. Values in brackets are metric equivalents.

Dimensions are shown for reference purposes only. Specifications subject to change.

USA: 1-800-522-6752
Canada: 1-905-470-4425
Mexico: 01-800-733-8926
C. America: 52-55-1106-0803

South America: 55-11-2103-6000
Hong Kong: 852-2735-1628
Japan: 81-44-844-8013
UK: 44-8706-080-208

High Density Catalog.pdf 1 05/04/2022 14:05:27

Micro MATE-N-LOK 3 mm Connector System (Continued)

Vertical Header Assemblies

(Continued)

Dual Row, Through-Hole, with Retention Feature on Soldertail

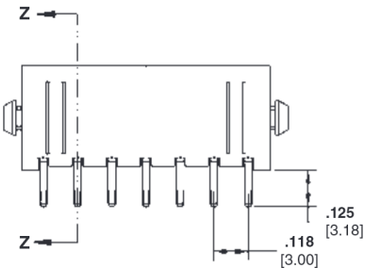

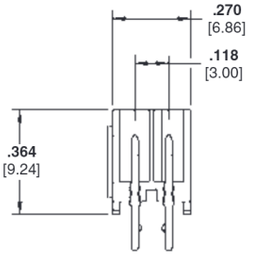

Section Z-Z

Material and Finish

Housing — High Temperature Nylon, Black

Flammability Rating — UL 94V-0

Contacts—Brass

Plating A—.000100 [0.00254] min. tin over .000050 [0.00127] min. nickel

Plating B—.000015 [0.00038] gold in mating area, .000100 [0.00254] min. tin in solder area, with entire contact underplated .000050 [0.00127] min. nickel

Plating C—.000030 [0.00076] gold in mating area, .000100 [0.00254] min. tin in solder area, with entire contact underplated .000050 [0.00127] min. nickel

Hold-downs—Phosphor Bronze, .000100 [0.00254] min. tin over .000050 [0.00127] min. nickel

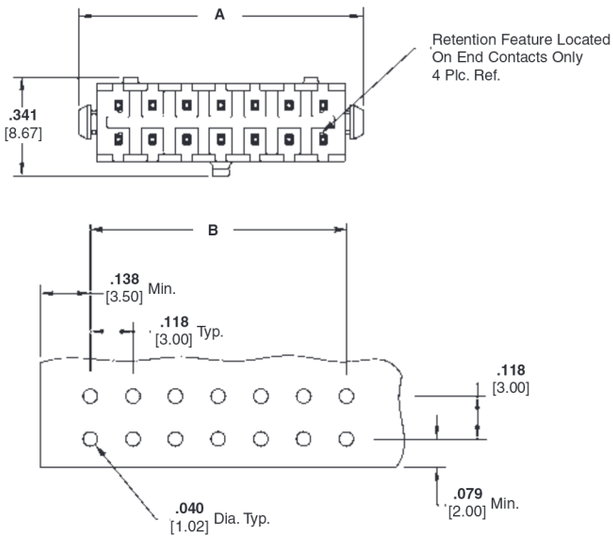

Recommended PC Board Layout*

Related Product Data

Mateable Housings:

Dual Row Receptacle Housing—page 24

Number of Circuits	Dimensions		Header Part Numbers			Mates with Receptacle Housing Part Number
	A	B	Plating A	Plating B	Plating C	
2	.276 7.00	—	3-794630-2	3-794631-2	3-794632-2	794617-2
4	.394 10.00	.118 3.00	3-794630-4	3-794631-4	3-794632-4	794617-4
6	.512 13.00	.236 6.00	3-794630-6	3-794631-6	3-794632-6	794617-6
8	.630 16.00	.354 9.00	3-794630-8	3-794631-8	3-794632-8	794617-8
10	.748 19.00	.472 12.00	4-794630-0	4-794631-0	4-794632-0	1-794617-0
12	.866 22.00	.591 15.00	4-794630-2	4-794631-2	4-794632-2	1-794617-2
14	.984 25.00	.709 18.00	4-794630-4	4-794631-4	4-794632-4	1-794617-4
16	1.102 28.00	.827 21.00	4-794630-6	4-794631-6	4-794632-6	1-794617-6
18	1.220 31.00	.945 24.00	4-794630-8	4-794631-8	4-794632-8	1-794617-8
20	1.339 34.00	1.063 27.00	5-794630-0	5-794631-0	5-794632-0	2-794617-0
22	1.457 37.00	1.181 30.00	5-794630-2	5-794631-2	5-794632-2	2-794617-2
24	1.575 40.00	1.299 33.00	5-794630-4	5-794631-4	5-794632-4	2-794617-4

*Recommended PC Board thickness .062 [1.57]. Always consult customer drawing for PC Board layout dimensions.

Note: All part numbers are RoHS Compliant.

Catalog 82181
Revised 4-08

https://cwindustrial.co.za/

Dimensions are in inches and millimeters unless otherwise specified. Values in brackets are metric equivalents.

Dimensions are shown for reference purposes only. Specifications subject to change.

USA: 1-800-522-6752
Canada: 1-905-470-4425
Mexico: 01-800-733-8926
C. America: 52-55-1106-0803

South America: 55-11-2103-6000
Hong Kong: 852-2735-1628
Japan: 81-44-844-8013
UK: 44-8706-080-208

High Density Catalog.pdf 1 05/04/2022 14:05:55

Micro MATE-N-LOK 3 mm Connector System (Continued)

Vertical Header Assemblies

(Continued)

Dual Row, Through-Hole, with Retention Feature on Soldertail and Metal Through-Hole Hold-down

Material and Finish

Housing—High Temperature Nylon, Black

Flammability Rating—UL 94V-0

Contacts—Brass

Plating A—.000100 [0.00254] min. tin over .000050 [0.00127] min. nickel

Plating B—.000015 [0.00038] gold in mating area, .000100 [0.00254] min. tin in solder area, with entire contact underplated .000050 [0.00127] min. nickel

Plating C—.000030 [0.00076] gold in mating area, .000100 [0.00254] min. tin in solder area, with entire contact underplated .000050 [0.00127] min. nickel

Hold-downs—Phosphor Bronze, .000100 [0.00254] min. tin over .000050 [0.00127] min. nickel

Related Product Data

Mateable Housings:

Dual Row Receptacle Housing—page 24

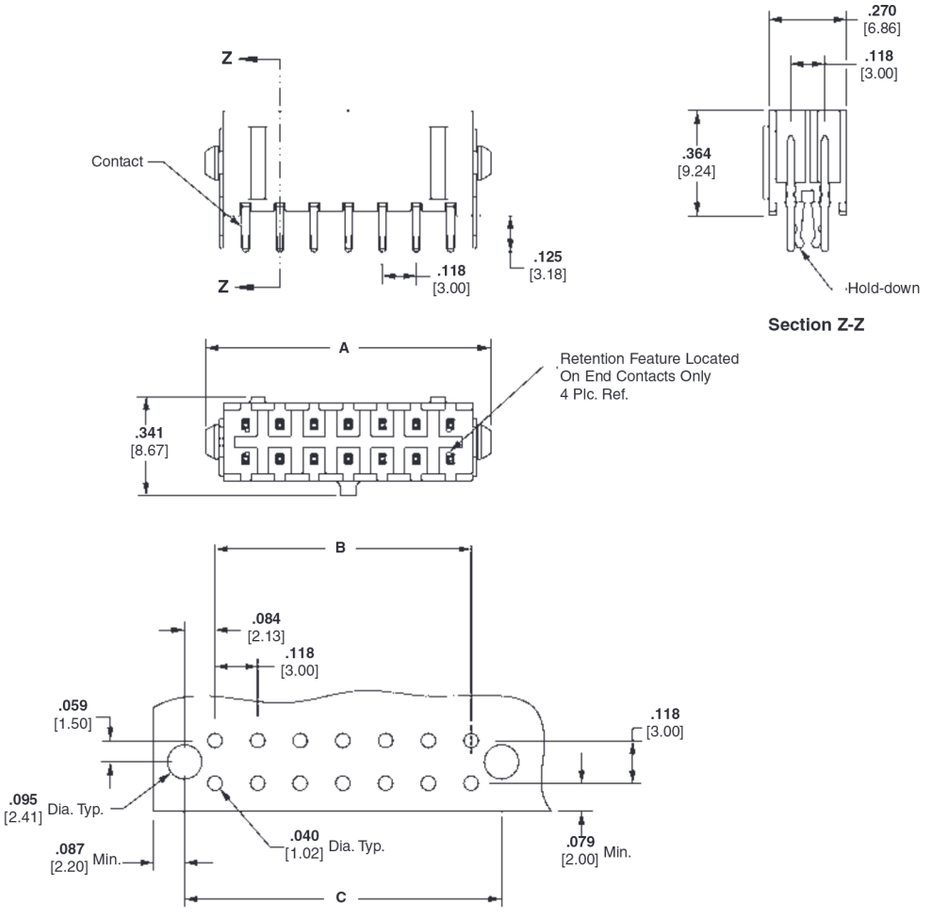

Recommended PC Board Layout*

Number of Circuits	Dimensions			Header Part Numbers			Mates with Receptacle Housing Part Number
	A	B	C	Plating A	Plating B	Plating C	
2	**.276** 7.00	—	**.169** 4.30	3-794680-2	3-794681-2	3-794682-2	794617-2
4	**.394** 10.00	**.118** 3.00	**.287** 7.30	3-794680-4	3-794681-4	3-794682-4	794617-4
6	**.512** 13.00	**.236** 6.00	**.406** 10.30	3-794680-6	3-794681-6	3-794682-6	794617-6
8	**.630** 16.00	**.354** 9.00	**.524** 13.30	3-794680-8	3-794681-8	3-794682-8	794617-8
10	**.748** 19.00	**.472** 12.00	**.642** 16.30	4-794680-0	4-794681-0	4-794682-0	1-794617-0
12	**.866** 22.00	**.591** 15.00	**.760** 19.30	4-794680-2	4-794681-2	4-794682-2	1-794617-2
14	**.984** 25.00	**.709** 18.00	**.878** 22.30	4-794680-4	4-794681-4	4-794682-4	1-794617-4
16	**1.102** 28.00	**.827** 21.00	**.996** 25.30	4-794680-6	4-794681-6	4-794682-6	1-794617-6
18	**1.220** 31.00	**.945** 24.00	**1.114** 28.30	4-794680-8	4-794681-8	4-794682-8	1-794617-8
20	**1.339** 34.00	**1.063** 27.00	**1.232** 31.30	5-794680-0	5-794681-0	5-794682-0	2-794617-0
22	**1.457** 37.00	**1.181** 30.00	**1.350** 34.30	5-794680-2	5-794681-2	5-794682-2	2-794617-2
24	**1.575** 40.00	**1.299** 33.00	**1.469** 37.30	5-794680-4	5-794681-4	5-794682-4	2-794617-4

*Recommended PC Board thickness .062 [1.57]. Always consult customer drawing for PC Board layout dimensions.

Note: All part numbers are RoHS Compliant.

Catalog 82181
Revised 4-08

https://cwindustrial.co.za/

Dimensions are in inches and millimeters unless otherwise specified. Values in brackets are metric equivalents.

Dimensions are shown for reference purposes only. Specifications subject to change.

USA: 1-800-522-6752
Canada: 1-905-470-4425
Mexico: 01-800-733-8926
C. America: 52-55-1106-0803

South America: 55-11-2103-6000
Hong Kong: 852-2735-1628
Japan: 81-44-844-8013
UK: 44-8706-080-208

High Density Catalog.pdf 1 05/04/2022 14:06:12

Micro MATE-N-LOK 3 mm Connector System (Continued)

Vertical Header Assemblies
(Continued)

Dual Row, Surface Mount, with Metal Through-Hole Hold-down

Material and Finish

Housing—High Temperature Nylon, Black

Flammability Rating—UL 94V-0

Contacts—Brass

Plating A—.000100 [0.00254] min. tin over .000050 [0.00127] min. nickel

Plating B—.000015 [0.00038] gold in mating area, .000100 [0.00254] min. tin in solder area, with entire contact underplated .000050 [0.00127] min. nickel

Plating C—.000030 [0.00076] gold in mating area, .000100 [0.00254] min. tin in solder area, with entire contact underplated .000050 [0.00127] min. nickel

Hold-downs—Phosphor Bronze, .000100 [0.00254] min. tin over .000050 [0.00127] min. nickel

Pick-up Button—Kapton

Related Product Data

Mateable Housings:

Dual Row Receptacle Housing—page 24

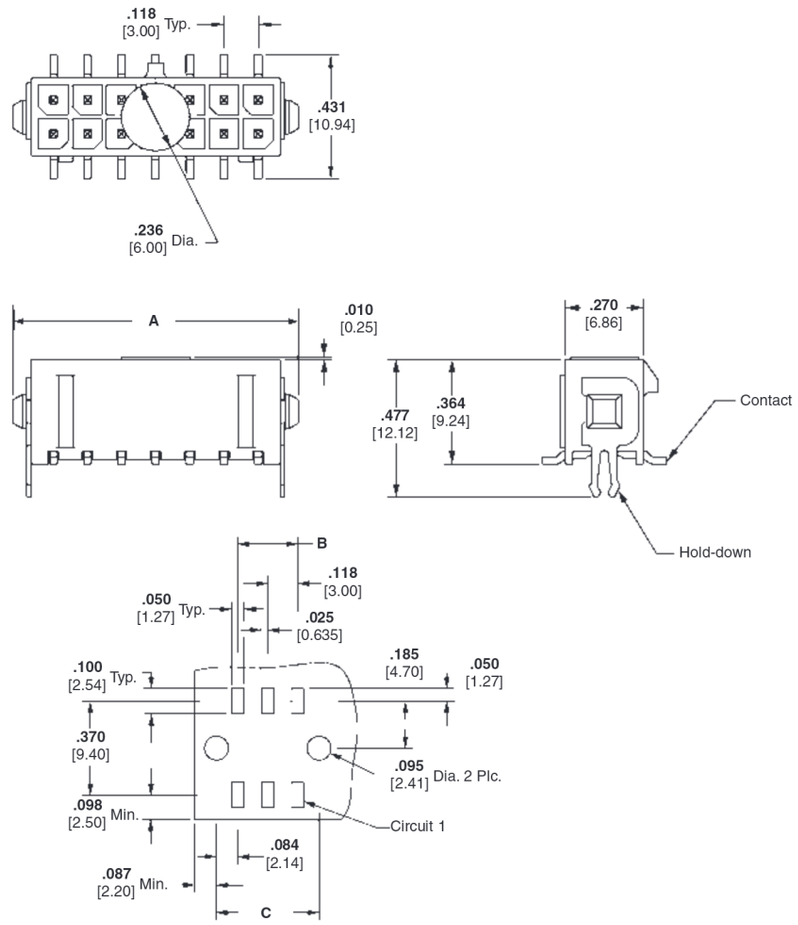

Recommended PC Board Layout*

Number of Circuits	Dimensions			Header Part Numbers			Mates with Receptacle Housing Part Number
	A	B	C	Plating A	Plating B	Plating C	
2	**.276** 7.00	—	**.169** 4.30	3-794633-2	3-794634-2	3-794635-2	794617-2
4	**.394** 10.00	**.118** 3.00	**.287** 7.30	3-794633-4	3-794634-4	3-794635-4	794617-4
6	**.512** 13.00	**.236** 6.00	**.406** 10.30	3-794633-6	3-794634-6	3-794635-6	794617-6
8	**.630** 16.00	**.354** 9.00	**.524** 13.30	3-794633-8	3-794634-8	3-794635-8	794617-8
10	**.748** 19.00	**.472** 12.00	**.642** 16.30	4-794633-0	4-794634-0	4-794635-0	1-794617-0
12	**.866** 22.00	**.591** 15.00	**.760** 19.30	4-794633-2	4-794634-2	4-794635-2	1-794617-2
14	**.984** 25.00	**.709** 18.00	**.878** 22.30	4-794633-4	4-794634-4	4-794635-4	1-794617-4
16	**1.10** 28.00	**2.827** 21.00	**.996** 25.30	4-794633-6	4-794634-6	4-794635-6	1-794617-6
18	**1.220** 31.00	**0.945** 24.00	**1.114** 28.30	4-794633-8	4-794634-8	4-794635-8	1-794617-8
20	**1.339** 34.00	**1.063** 27.00	**1.232** 31.30	5-794633-0	5-794634-0	5-794635-0	2-794617-0
22	**1.457** 37.00	**1.181** 30.00	**1.350** 34.30	5-794633-2	5-794634-2	5-794635-2	2-794617-2
24	**1.575** 40.00	**1.299** 33.00	**1.469** 37.30	5-794633-4	5-794634-4	5-794635-4	2-794617-4

*Recommended PC Board thickness .062 [1.57]. Always consult customer drawing for PC Board layout dimensions.

Note: All part numbers are RoHS Compliant.

Catalog 82181
Revised 4-08

https://cwindustrial.co.za/

Dimensions are in inches and millimeters unless otherwise specified. Values in brackets are metric equivalents.

Dimensions are shown for reference purposes only. Specifications subject to change.

USA: 1-800-522-6752
Canada: 1-905-470-4425
Mexico: 01-800-733-8926
C. America: 52-55-1106-0803

South America: 55-11-2103-6000
Hong Kong: 852-2735-1628
Japan: 81-44-844-8013
UK: 44-8706-080-208

High Density Catalog.pdf 1 05/04/2022 14:06:27

Micro MATE-N-LOK 3 mm Connector System (Continued)

Vertical Header Assemblies
(Continued)

Dual Row, Surface Mount, with Surface Mount Hold-down

Material and Finish

Housing — High Temperature Nylon, Black

Flammability Rating — UL 94V-0

Contacts—Brass

Plating A—.000100 [0.00254] min. tin over .000050 [0.00127] min. nickel

Plating B—.000015 [0.00038] gold in mating area, .000100 [0.00254] min. tin in solder area, with entire contact underplated .000050 [0.00127] min. nickel

Plating C—.000030 [0.00076] gold in mating area, .000100 [0.00254] min. tin in solder area, with entire contact underplated .000050 [0.00127] min. nickel

Hold-downs—Phosphor Bronze, .000100 [0.00254] min. tin over .000050 [0.00127] min. nickel

Pick-up Button — Kapton

Related Product Data

Mateable Housings:

Dual Row Receptacle Housing—page 24

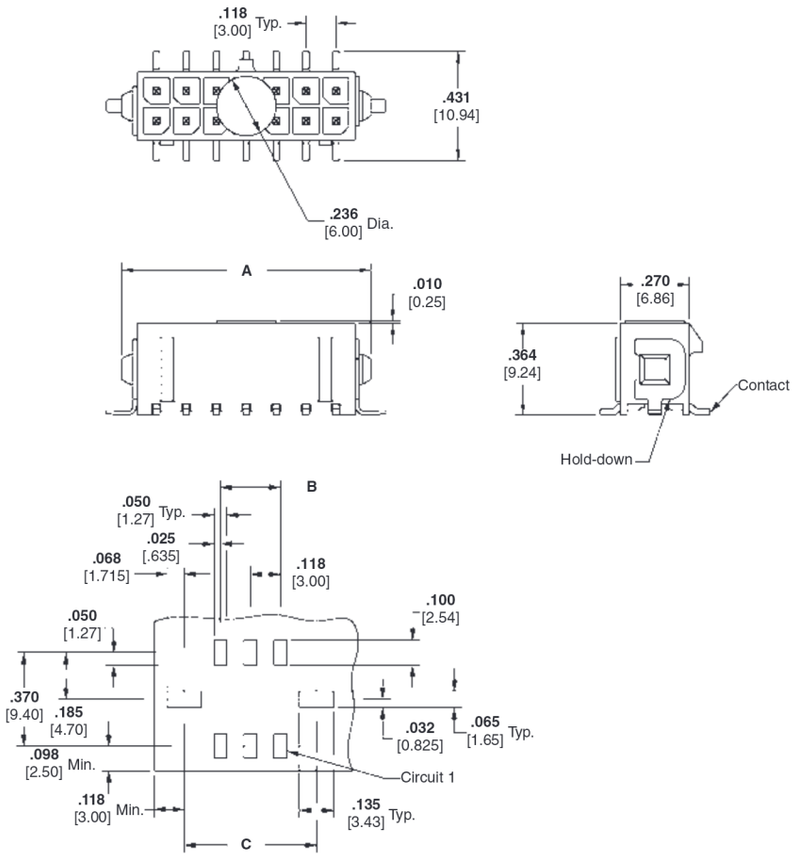

Recommended PC Board Layout*

Number of Circuits	Dimensions			Header Part Numbers			Mates with Receptacle Housing Part Number
	A	B	C	Plating A	Plating B	Plating C	
2	**.276** 7.00	—	**.286** 7.27	3-794636-2	3-794637-2	3-794638-2	794617-2
4	**.394** 10.00	**.118** 3.00	**.404** 10.27	3-794636-4	3-794637-4	3-794638-4	794617-4
6	**.512** 13.00	**.236** 6.00	**.522** 13.27	3-794636-6	3-794637-6	3-794638-6	794617-6
8	**.630** 16.00	**.354** 9.00	**.640** 16.27	3-794636-8	3-794637-8	3-794638-8	794617-8
10	**.748** 19.00	**.472** 12.00	**.758** 19.27	4-794636-0	4-794637-0	4-794638-0	1-794617-0
12	**.866** 22.00	**.591** 15.00	**.876** 22.27	4-794636-2	4-794637-2	4-794638-2	1-794617-2
14	**.984** 25.00	**.709** 18.00	**.994** 25.27	4-794636-4	4-794637-4	4-794638-4	1-794617-4
16	**1.102** 28.00	**.827** 21.00	**1.112** 28.27	4-794636-6	4-794637-6	4-794638-6	1-794617-6
18	**1.220** 31.00	**.945** 24.00	**1.230** 31.27	4-794636-8	4-794637-8	4-794638-8	1-794617-8
20	**1.339** 34.00	**1.063** 27.00	**1.349** 34.27	5-794636-0	5-794637-0	5-794638-0	2-794617-0
22	**1.457** 37.00	**1.181** 30.00	**1.467** 37.27	5-794636-2	5-794637-2	5-794638-2	2-794617-2
24	**1.575** 40.00	**1.299** 33.00	**1.585** 40.27	5-794636-4	5-794637-4	5-794638-4	2-794617-4

*Always consult customer drawing for PC Board layout dimensions.

Note: All part numbers are RoHS Compliant.

Catalog 82181
Revised 4-08

https://cwindustrial.co.za/

Dimensions are in inches and millimeters unless otherwise specified. Values in brackets are metric equivalents.

Dimensions are shown for reference purposes only. Specifications subject to change.

USA: 1-800-522-6752
Canada: 1-905-470-4425
Mexico: 01-800-733-8926
C. America: 52-55-1106-0803

South America: 55-11-2103-6000
Hong Kong: 852-2735-1628
Japan: 81-44-844-8013
UK: 44-8706-080-208

High Density Catalog.pdf 1 05/04/2022 14:06:44

Micro MATE-N-LOK 3 mm Connector System (Continued)

Right-Angle Header Assemblies

Single Row, Through-Hole, with Metal Through-Hole Hold-down

Material and Finish

Housing—High Temperature Nylon, Black

Flammability Rating—UL 94V-0

Contacts—Brass

Plating A—.000100 [0.00254] min. tin over .000050 [0.00127] min. nickel

Plating B—.000015 [0.00038] gold in mating area, .000100 [0.00254] min. tin in solder area, with entire contact underplated .000050 [0.00127] min. nickel

Plating C—.000030 [0.00076] gold in mating area, .000100 [0.00254] min. tin in solder area, with entire contact underplated .000050 [0.00127] min. nickel

Hold-downs—Phosphor Bronze, .000100 [0.00254] min. tin over .000050 [0.00127] min. nickel

Related Product Data

Mateable Housings:

Single Row Receptacle Housing—
page 23

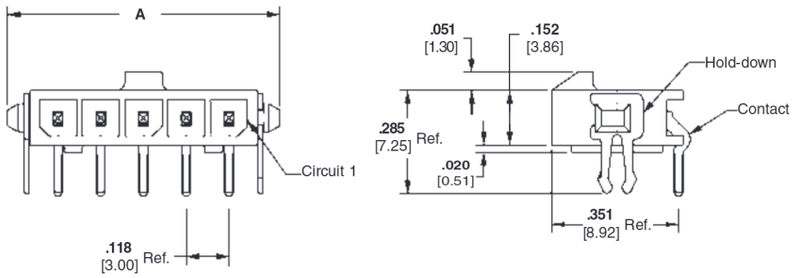

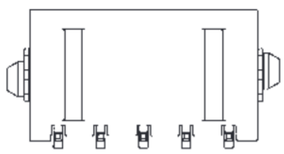

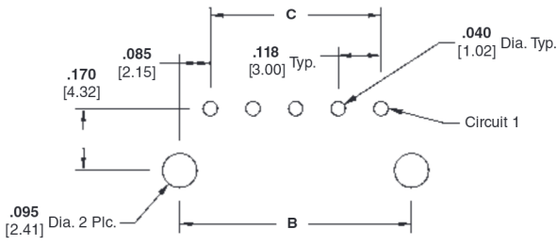

Recommended PC Board Layout*

Number of Circuits	Dimensions			Header Part Numbers			Mates with Receptacle Housing Part Number
	A	B	C	Plating A	Plating B	Plating C	
2	**.399** 10.14	**.293** 7.43	**.118** 3.00	2-1445054-2	2-1445088-2	2-1445097-2	1445022-2
3	**.517** 13.14	**.411** 10.43	**.236** 6.00	2-1445054-3	2-1445088-3	2-1445097-3	1445022-3
4	**.635** 16.14	**.529** 13.43	**.354** 9.00	2-1445054-4	2-1445088-4	2-1445097-4	1445022-4
5	**.754** 19.14	**.647** 16.43	**.472** 12.00	2-1445054-5	2-1445088-5	2-1445097-5	1445022-5
6	**.871** 22.14	**.765** 19.43	**.591** 15.00	2-1445054-6	2-1445088-6	2-1445097-6	1445022-6
7	**.990** 25.14	**.883** 22.43	**.709** 18.00	2-1445054-7	2-1445088-7	2-1445097-7	1445022-7
8	**1.108** 28.14	**1.001** 25.43	**.827** 21.00	2-1445054-8	2-1445088-8	2-1445097-8	1445022-8
9	**1.226** 31.14	**1.119** 28.43	**.945** 24.00	2-1445054-9	2-1445088-9	2-1445097-9	1445022-9
10	**1.344** 34.14	**1.237** 31.43	**1.063** 27.00	3-1445054-0	3-1445088-0	3-1445097-0	1-1445022-0
11	**1.462** 37.14	**1.356** 34.43	**1.181** 30.00	3-1445054-1	3-1445088-1	3-1445097-1	1-1445022-1
12	**1.580** 40.14	**1.474** 37.43	**1.299** 33.00	3-1445054-2	3-1445088-2	3-1445097-2	1-1445022-2

*Recommended PC Board thickness .062 [1.57]. Always consult customer drawing for PC Board layout dimensions.

Note: All part numbers are RoHS Compliant.

Catalog 82181
Revised 4-08

https://cwindustrial.co.za/

Dimensions are in inches and millimeters unless otherwise specified. Values in brackets are metric equivalents.

Dimensions are shown for reference purposes only. Specifications subject to change.

USA: 1-800-522-6752
Canada: 1-905-470-4425
Mexico: 01-800-733-8926
C. America: 52-55-1106-0803

South America: 55-11-2103-6000
Hong Kong: 852-2735-1628
Japan: 81-44-844-8013
UK: 44-8706-080-208

High Density Catalog.pdf 1 05/04/2022 14:07:01

Micro MATE-N-LOK 3 mm Connector System (Continued)

Right-Angle Header Assemblies (Continued)

Single Row, Through-Hole, with Plastic Boardlock

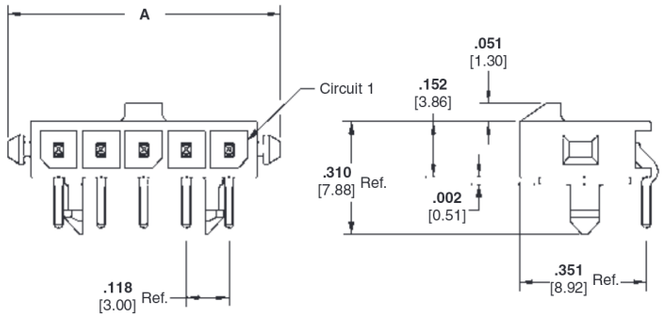

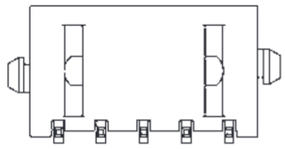

Material and Finish

Housing — High Temperature Nylon, Black

Flammability Rating — UL 94V-0

Contacts—Brass

Plating A—.000100 [0.00254] min. tin over .000050 [0.00127] min. nickel

Plating B—.000015 [0.00038] gold in mating area, .000100 [0.00254] min. tin in solder area, with entire contact underplated .000050 [0.00127] min. nickel

Plating C—.000030 [0.00076] gold in mating area, .000100 [0.00254] min. tin in solder area, with entire contact underplated .000050 [0.00127] min. nickel

Related Product Data

Mateable Housings:

Single Row Receptacle Housing—
page 23

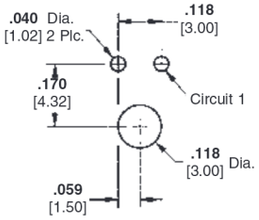

Recommended PC Board Layout 2 Position*

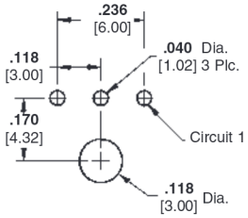

Recommended PC Board Layout 3 Position*

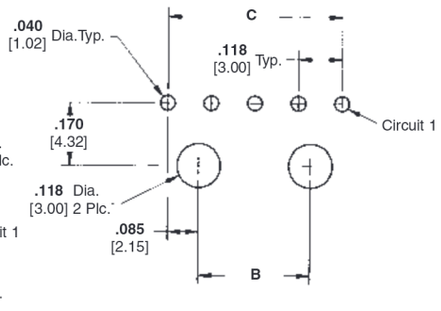

Recommended PC Board Layout 4-12 Position*

Number of Circuits	Dimensions			Header Part Numbers			Mates with Receptacle Housing Part Number
	A	B	C	Plating A	Plating B	Plating C	
2	**.399** 10.14	—	—	2-1445055-2	2-1445089-2	2-1445098-2	1445022-2
3	**.517** 13.14	—	—	2-1445055-3	2-1445089-3	2-1445098-3	1445022-3
4	**.635** 16.14	**.185** 4.70	**.354** 9.00	2-1445055-4	2-1445089-4	2-1445098-4	1445022-4
5	**.754** 19.14	**.303** 7.70	**.472** 12.00	2-1445055-5	2-1445089-5	2-1445098-5	1445022-5
6	**.871** 22.14	**.421** 10.70	**.591** 15.00	2-1445055-6	2-1445089-6	2-1445098-6	1445022-6
7	**.990** 25.14	**.539** 13.70	**.709** 18.00	2-1445055-7	2-1445089-7	2-1445098-7	1445022-7
8	**1.108** 28.14	**.657** 16.70	**.827** 21.00	2-1445055-8	2-1445089-8	2-1445098-8	1445022-8
9	**1.226** 31.14	**.775** 19.70	**.945** 24.00	2-1445055-9	2-1445089-9	2-1445098-9	1445022-9
10	**1.344** 34.14	**.894** 22.70	**1.063** 27.00	3-1445055-0	3-1445089-0	3-1445098-0	1-1445022-0
11	**1.462** 37.14	**1.012** 25.70	**1.181** 30.00	3-1445055-1	3-1445089-1	3-1445098-1	1-1445022-1
12	**1.580** 40.14	**1.300** 28.70	**1.299** 33.00	3-1445055-2	3-1445089-2	3-1445098-2	1-1445022-2

*Recommended PC Board thickness .062 [1.57]. Always consult customer drawing for PC Board layout dimensions.

Note: All part numbers are RoHS Compliant.

Catalog 82181
Revised 4-08

https://cwindustrial.co.za/

Dimensions are in inches and millimeters unless otherwise specified. Values in brackets are metric equivalents.

Dimensions are shown for reference purposes only. Specifications subject to change.

USA: 1-800-522-6752
Canada: 1-905-470-4425
Mexico: 01-800-733-8926
C. America: 52-55-1106-0803

South America: 55-11-2103-6000
Hong Kong: 852-2735-1628
Japan: 81-44-844-8013
UK: 44-8706-080-208

High Density Catalog.pdf 1 05/04/2022 14:07:18

Micro MATE-N-LOK 3 mm Connector System (Continued)

Right-Angle Header Assemblies (Continued)

Single Row, Surface Mount, with Metal Through-Hole Hold-down

Material and Finish

Housing — High Temperature Nylon, Black

Flammability Rating — UL 94V-0

Contacts—Brass

Plating A—.000100 [0.00254] min. tin over .000050 [0.00127] min. nickel

Plating B—.000015 [0.00038] gold in mating area, .000100 [0.00254] min. tin in solder area, with entire contact underplated .000050 [0.00127] min. nickel

Plating C—.000030 [0.00076] gold in mating area, .000100 [0.00254] min. tin in solder area, with entire contact underplated .000050 [0.00127] min. nickel

Hold-downs—Phosphor Bronze, .000100 [0.00254] min. tin over .000050 [0.00127] min. nickel

Related Product Data

Mateable Housings:

Single Row Receptacle Housing—page 23

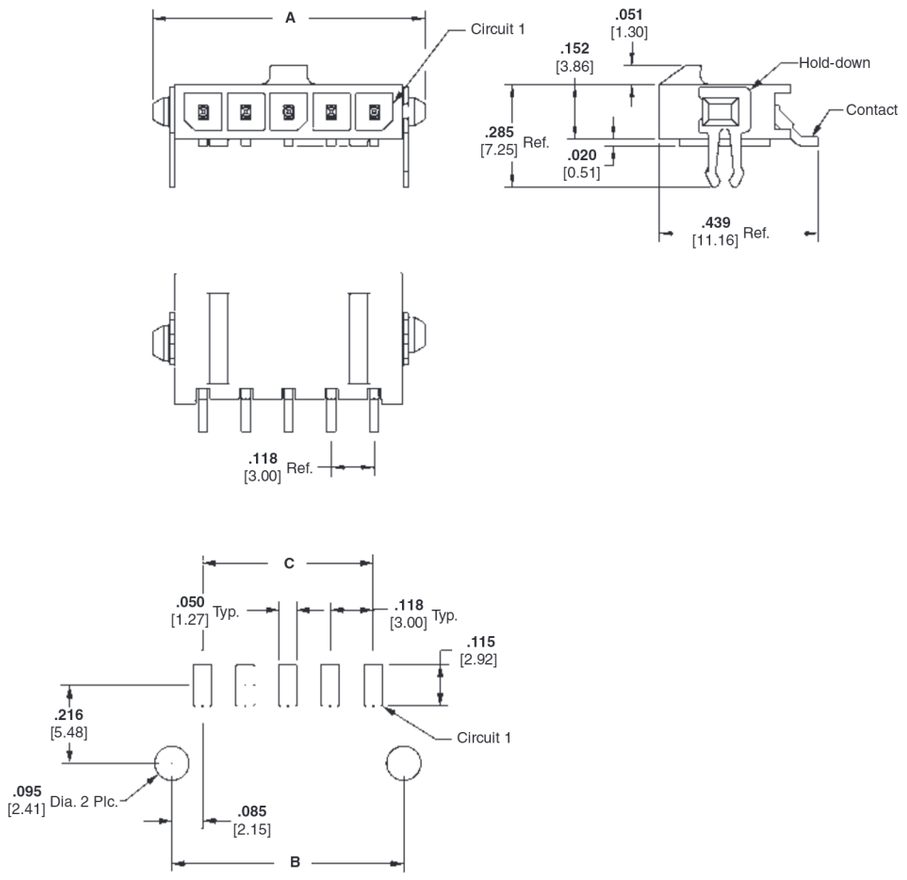

Recommended PC Board Layout*

Number of Circuits	Dimensions			Header Part Numbers			Mates with Receptacle Housing Part Number
	A	B	C	Plating A	Plating B	Plating C	
2	**.394** 10.00	**.293** 7.43	**.118** 3.00	2-1445056-2	2-1445090-2	2-1445099-2	1445022-2
3	**.512** 13.00	**.411** 10.43	**.236** 6.00	2-1445056-3	2-1445090-3	2-1445099-3	1445022-3
4	**.630** 16.00	**.529** 13.43	**.354** 9.00	2-1445056-4	2-1445090-4	2-1445099-4	1445022-4
5	**.748** 19.00	**.647** 16.43	**.472** 12.00	2-1445056-5	2-1445090-5	2-1445099-5	1445022-5
6	**.866** 22.00	**.765** 19.43	**.591** 15.00	2-1445056-6	2-1445090-6	2-1445099-6	1445022-6
7	**.984** 25.00	**.883** 22.43	**.709** 18.00	2-1445056-7	2-1445090-7	2-1445099-7	1445022-7
8	**1.102** 28.00	**1.001** 25.43	**.827** 21.00	2-1445056-8	2-1445090-8	2-1445099-8	1445022-8
9	**1.220** 31.00	**1.119** 28.43	**0.945** 24.00	2-1445056-9	2-1445090-9	2-1445099-9	1445022-9
10	**1.339** 34.00	**1.237** 31.43	**1.063** 27.00	3-1445056-0	3-1445090-0	3-1445099-0	1-1445022-0
11	**1.457** 37.00	**1.356** 34.43	**1.181** 30.00	3-1445056-1	3-1445090-1	3-1445099-1	1-1445022-1
12	**1.575** 40.00	**1.474** 37.43	**1.299** 33.00	3-1445056-2	3-1445090-2	3-1445099-2	1-1445022-2

*Recommended PC Board thickness .062 [1.57]. Always consult customer drawing for PC Board layout dimensions.

Note: All part numbers are RoHS Compliant.

Catalog 82181
Revised 4-08

https://cwindustrial.co.za/

Dimensions are in inches and millimeters unless otherwise specified. Values in brackets are metric equivalents.

Dimensions are shown for reference purposes only. Specifications subject to change.

USA: 1-800-522-6752
Canada: 1-905-470-4425
Mexico: 01-800-733-8926
C. America: 52-55-1106-0803

South America: 55-11-2103-6000
Hong Kong: 852-2735-1628
Japan: 81-44-844-8013
UK: 44-8706-080-208

High Density Catalog.pdf 1 05/04/2022 14:07:46

Micro MATE-N-LOK 3 mm Connector System (Continued)

Right-Angle Header Assemblies (Continued)

Single Row, Surface Mount, with Surface Mount Hold-down

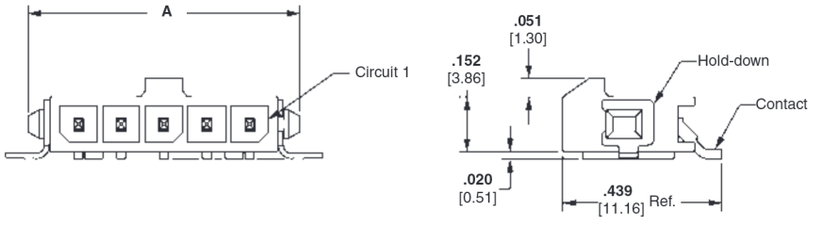

Material and Finish

Housing — High Temperature Nylon, Black

Flammability Rating — UL 94V-0

Contacts—Brass

Plating A—.000100 [0.00254] min. tin over .000050 [0.00127] min. nickel

Plating B—.000015 [0.00038] gold in mating area, .000100 [0.00254] min. tin in solder area, with entire contact underplated .000050 [0.00127] min. nickel

Plating C—.000030 [0.00076] gold in mating area, .000100 [0.00254] min. tin in solder area, with entire contact underplated .000050 [0.00127] min. nickel

Hold-downs—Phosphor Bronze, .000100 [0.00254] min. tin over .000050 [0.00127] min. nickel

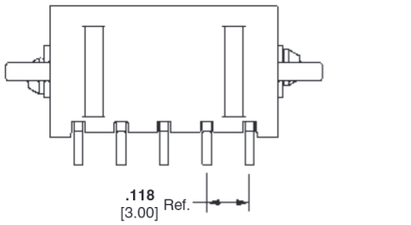

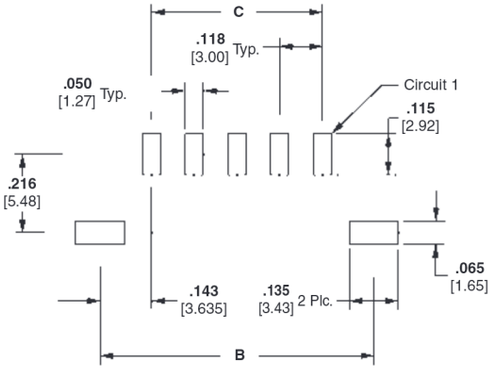

Recommended PC Board Layout*

Related Product Data

Mateable Housings:

Single Row Receptacle Housing—page 23

Number of Circuits	Dimensions			Header Part Numbers			Mates with Receptacle Housing Part Number
	A	B	C	Plating A	Plating B	Plating C	
2	**.394** 10.00	**.410** 10.41	**.118** 3.00	2-1445057-2	2-1445091-2	2-1445100-2	1445022-2
3	**.512** 13.00	**.528** 13.41	**.236** 6.00	2-1445057-3	2-1445091-3	2-1445100-3	1445022-3
4	**.630** 16.00	**.646** 16.41	**.354** 9.00	2-1445057-4	2-1445091-4	2-1445100-4	1445022-4
5	**.748** 19.00	**.764** 19.41	**.472** 12.00	2-1445057-5	2-1445091-5	2-1445100-5	1445022-5
6	**.866** 22.00	**.882** 22.41	**.591** 15.00	2-1445057-6	2-1445091-6	2-1445100-6	1445022-6
7	**.984** 25.00	**1.000** 25.41	**.709** 18.00	2-1445057-7	2-1445091-7	2-1445100-7	1445022-7
8	**1.102** 28.00	**1.119** 28.41	**.827** 21.00	2-1445057-8	2-1445091-8	2-1445100-8	1445022-8
9	**1.220** 31.00	**1.237** 31.41	**.945** 24.00	2-1445057-9	2-1445091-9	2-1445100-9	1445022-9
10	**1.339** 34.00	**1.355** 34.41	**1.063** 27.00	3-1445057-0	3-1445091-0	3-1445100-0	1-1445022-0
11	**1.457** 37.00	**1.472** 37.41	**1.181** 30.00	3-1445057-1	3-1445091-1	3-1445100-1	1-1445022-1
12	**1.575** 40.00	**1.591** 40.41	**1.299** 33.00	3-1445057-2	3-1445091-2	3-1445100-2	1-1445022-2

*Always consult customer drawing for PC Board layout dimensions.

Note: All part numbers are RoHS Compliant.

Catalog 82181
Revised 4-08

https://cwindustrial.co.za/

Dimensions are in inches and millimeters unless otherwise specified. Values in brackets are metric equivalents.

Dimensions are shown for reference purposes only. Specifications subject to change.

USA: 1-800-522-6752
Canada: 1-905-470-4425
Mexico: 01-800-733-8926
C. America: 52-55-1106-0803

South America: 55-11-2103-6000
Hong Kong: 852-2735-1628
Japan: 81-44-844-8013
UK: 44-8706-080-208

High Density Catalog.pdf 1 05/04/2022 14:08:07

Micro MATE-N-LOK 3 mm Connector System (Continued)

Right-Angle Header Assemblies (Continued)

Single Row, Surface Mount, with Plastic Boardlock

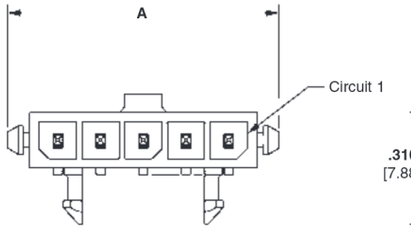

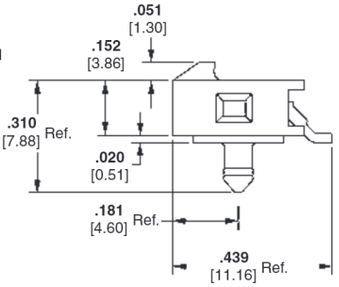

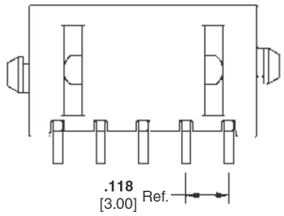

Material and Finish

Housing — High Temperature Nylon, Black

Flammability Rating — UL 94V-0

Contacts—Brass

Plating A—.000100 [0.00254] min. tin over .000050 [0.00127] min. nickel

Plating B—.000015 [0.00038] gold in mating area, .000100 [0.00254] min. tin in solder area, with entire contact underplated .000050 [0.00127] min. nickel

Plating C—.000030 [0.00076] gold in mating area, .000100 [0.00254] min. tin in solder area, with entire contact underplated .000050 [0.00127] min. nickel

Related Product Data

Mateable Housings:

Single Row Receptacle Housing—page 23

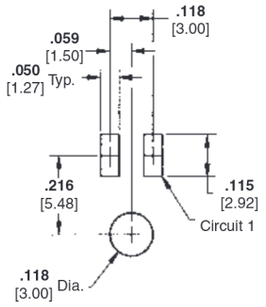

Recommended PC Board Layout * 2 Position

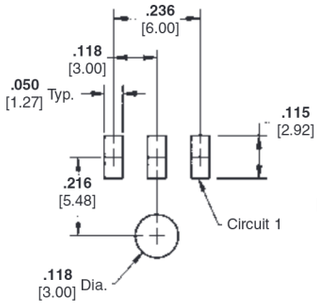

Recommended PC Board Layout * 3 Position

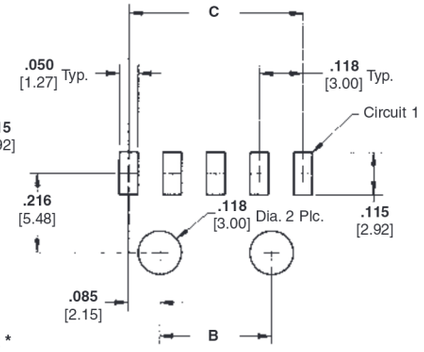

Recommended PC Board Layout* 4-12 Positions

Number of Circuits	Dimensions			Header Part Numbers			Mates with Receptacle Housing Part Number
	A	B	C	Plating A	Plating B	Plating C	
2	**.394** 10.00	—	—	2-1445058-2	2-1445092-2	2-1445101-2	1445022-2
3	**.512** 13.00	—	—	2-1445058-3	2-1445092-3	2-1445101-3	1445022-3
4	**.630** 16.00	**.185** 4.70	**.354** 9.00	2-1445058-4	2-1445092-4	2-1445101-4	1445022-4
5	**.748** 19.00	**.303** 7.70	**.472** 12.00	2-1445058-5	2-1445092-5	2-1445101-5	1445022-5
6	**.866** 22.00	**.421** 10.70	**.591** 15.00	2-1445058-6	2-1445092-6	2-1445101-6	1445022-6
7	**.984** 25.00	**.539** 13.70	**.709** 18.00	2-1445058-7	2-1445092-7	2-1445101-7	1445022-7
8	**1.102** 28.00	**.657** 16.70	**.827** 21.00	2-1445058-8	2-1445092-8	2-1445101-8	1445022-8
9	**1.220** 31.00	**.776** 19.70	**.945** 24.00	2-1445058-9	2-1445092-9	2-1445101-9	1445022-9
10	**1.339** 34.00	**.894** 22.70	**1.063** 27.00	3-1445058-0	3-1445092-0	3-1445101-0	1-1445022-0
11	**1.457** 37.00	**1.012** 25.70	**1.181** 30.00	3-1445058-1	3-1445092-1	3-1445101-1	1-1445022-1
12	**1.575** 40.00	**1.130** 28.70	**1.299** 33.00	3-1445058-2	3-1445092-2	3-1445101-2	1-1445022-2

*Recommended PC Board thickness .062 [1.57]. Always consult customer drawing for PC Board layout dimensions.

Note: All part numbers are RoHS Compliant.

Catalog 82181
Revised 4-08

https://cwindustrial.co.za/

Dimensions are in inches and millimeters unless otherwise specified. Values in brackets are metric equivalents.

Dimensions are shown for reference purposes only. Specifications subject to change.

USA: 1-800-522-6752
Canada: 1-905-470-4425
Mexico: 01-800-733-8926
C. America: 52-55-1106-0803

South America: 55-11-2103-6000
Hong Kong: 852-2735-1628
Japan: 81-44-844-8013
UK: 44-8706-080-208

High Density Catalog.pdf 1 05/04/2022 14:08:28

Micro MATE-N-LOK 3 mm Connector System (Continued)

Right-Angle Header Assemblies (Continued)

Dual Row, Through-Hole, with Metal Through-Hole Hold-down

Material and Finish

Housing — High Temperature Nylon, Black

Flammability Rating — UL 94V-0

Contacts—Brass

Plating A—.000100 [0.00254] min. tin over .000050 [0.00127] min. nickel

Plating B—.000015 [0.00038] gold in mating area, .000100 [0.00254] min. tin in solder area, with entire contact underplated .000050 [0.00127] min. nickel

Plating C—.000030 [0.00076] gold in mating area, .000100 [0.00254] min. tin in solder area, with entire contact underplated .000050 [0.00127] min. nickel

Hold-downs—Phosphor Bronze, .000100 [0.00254] min. tin over .000050 [0.00127] min. nickel

Related Product Data

Mateable Housings:

Dual Row Receptacle Housing—page 24

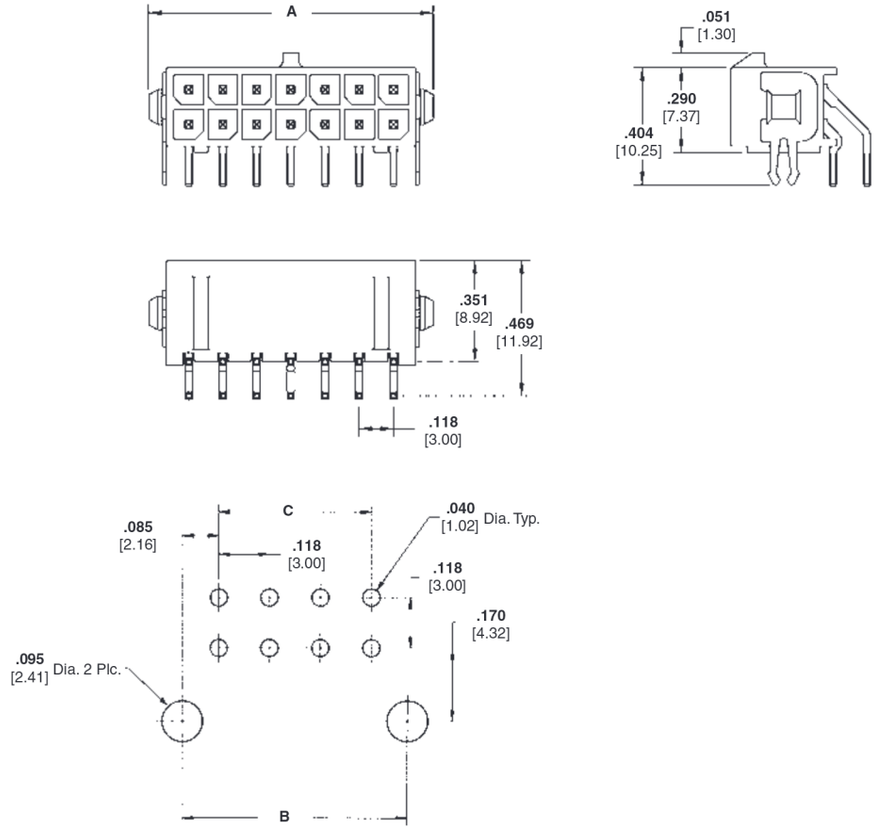

Recommended PC Board Layout*

Number of Circuits	Dimensions			Header Part Numbers			Mates with Receptacle Housing Part Number
	A	B	C	Plating A	Plating B	Plating C	
2	**.276** 7.00	**.169** 4.30	—	3-794677-2	3-794678-2	3-794679-2	794617-2
4	**.394** 10.00	**.287** 7.30	**.118** 3.00	3-794677-4	3-794678-4	3-794679-4	794617-4
6	**.512** 13.00	**.406** 10.30	**.236** 6.00	3-794677-6	3-794678-6	3-794679-6	794617-6
8	**.630** 16.00	**.524** 13.30	**.354** 9.00	3-794677-8	3-794678-8	3-794679-8	794617-8
10	**.748** 19.00	**.642** 16.30	**.472** 12.00	4-794677-0	4-794678-0	4-794679-0	1-794617-0
12	**.866** 22.00	**.760** 19.30	**.591** 15.00	4-794677-2	4-794678-2	4-794679-2	1-794617-2
14	**.984** 25.00	**.878** 22.30	**.709** 18.00	4-794677-4	4-794678-4	4-794679-4	1-794617-4
16	**1.102** 28.00	**.996** 25.30	**.827** 21.00	4-794677-6	4-794678-6	4-794679-6	1-794617-6
18	**1.220** 31.00	**1.114** 28.30	**.945** 24.00	4-794677-8	4-794678-8	4-794679-8	1-794617-8
20	**1.339** 34.00	**1.232** 31.30	**1.063** 27.00	5-794677-0	5-794678-0	5-794679-0	2-794617-0
22	**1.457** 37.00	**1.350** 34.30	**1.181** 30.00	5-794677-2	5-794678-2	5-794679-2	2-794617-2
24	**1.575** 40.00	**1.469** 37.30	**1.299** 33.00	5-794677-4	5-794678-4	5-794679-4	2-794617-4

*Recommended PC Board thickness .062 [1.57]. Always consult customer drawing for PC Board layout dimensions.

Note: All part numbers are RoHS Compliant.

Catalog 82181
Revised 4-08

https://cwindustrial.co.za/

Dimensions are in inches and millimeters unless otherwise specified. Values in brackets are metric equivalents.

Dimensions are shown for reference purposes only. Specifications subject to change.

USA: 1-800-522-6752
Canada: 1-905-470-4425
Mexico: 01-800-733-8926
C. America: 52-55-1106-0803

South America: 55-11-2103-6000
Hong Kong: 852-2735-1628
Japan: 81-44-844-8013
UK: 44-8706-080-208

High Density Catalog.pdf 1 05/04/2022 14:11:26

Micro MATE-N-LOK 3 mm Connector System (Continued)

Right-Angle Header Assemblies (Continued)

Dual Row, Through-Hole, with Plastic Boardlock

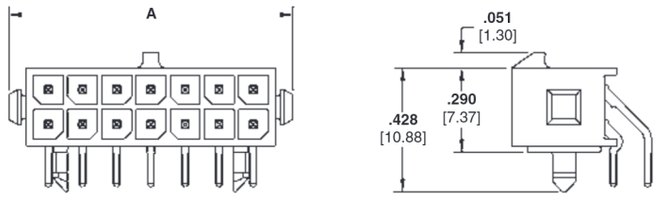

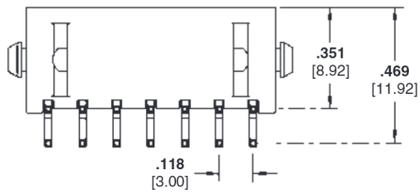

Material and Finish

Housing — High Temperature Nylon, Black

Flammability Rating — UL 94V-0

Contacts—Brass

Plating A—.000100 [0.00254] min. tin over .000050 [0.00127] min. nickel

Plating B—.000015 [0.00038] gold in mating area, .000100 [0.00254] min. tin in solder area, with entire contact underplated .000050 [0.00127] min. nickel

Plating C—.000030 [0.00076] gold in mating area, .000100 [0.00254] min. tin in solder area, with entire contact underplated .000050 [0.00127] min. nickel

Related Product Data

Mateable Housings:

Dual Row Receptacle Housing—page 24

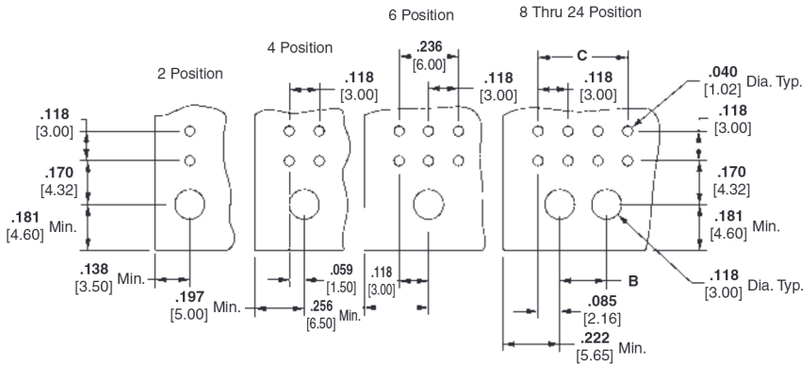

Recommended PC Board Layout*

Number of Circuits	Dimensions			Header Part Numbers			Mates with Receptacle Housing Part Number
	A	B	C	Plating A	Plating B	Plating C	
2	**.276** 7.00	—	—	3-794618-2	3-794619-2	3-794620-2	794617-2
4	**.394** 10.00	—	**.118** 3.00	3-794618-4	3-794619-4	3-794620-4	794617-4
6	**.512** 13.00	—	**.236** 6.00	3-794618-6	3-794619-6	3-794620-6	794617-6
8	**.630** 16.00	**.185** 4.70	**.354** 9.00	3-794618-8	3-794619-8	3-794620-8	794617-8
10	**.748** 19.00	**.303** 7.70	**.472** 12.00	4-794618-0	4-794619-0	4-794620-0	1-794617-0
12	**.866** 22.00	**.421** 10.70	**.591** 15.00	4-794618-2	4-794619-2	4-794620-2	1-794617-2
14	**.984** 25.00	**.539** 13.70	**.709** 18.00	4-794618-4	4-794619-4	4-794620-4	1-794617-4
16	**1.102** 28.00	**.657** 16.70	**.827** 21.00	4-794618-6	4-794619-6	4-794620-6	1-794617-6
18	**1.220** 31.00	**.776** 19.70	**.945** 24.00	4-794618-8	4-794619-8	4-794620-8	1-794617-8
20	**1.339** 34.00	**.894** 22.70	**1.063** 27.00	5-794618-0	5-794619-0	5-794620-0	2-794617-0
22	**1.457** 37.00	**1.012** 25.70	**1.181** 30.00	5-794618-2	5-794619-2	5-794620-2	2-794617-2
24	**1.575** 40.00	**1.130** 28.70	**1.299** 33.00	5-794618-4	5-794619-4	5-794620-4	2-794617-4

*Recommended PC Board thickness .062 [1.57]. Always consult customer drawing for PC Board layout dimensions.

Note: All part numbers are RoHS Compliant.

Catalog 82181
Revised 4-08

https://cwindustrial.co.za/

Dimensions are in inches and millimeters unless otherwise specified. Values in brackets are metric equivalents.

Dimensions are shown for reference purposes only. Specifications subject to change.

USA: 1-800-522-6752
Canada: 1-905-470-4425
Mexico: 01-800-733-8926
C. America: 52-55-1106-0803

South America: 55-11-2103-6000
Hong Kong: 852-2735-1628
Japan: 81-44-844-8013
UK: 44-8706-080-208

High Density Catalog.pdf 1 05/04/2022 14:11:52

Micro MATE-N-LOK 3 mm Connector System (Continued)

Right-Angle Header Assemblies (Continued)

Dual Row, Surface Mount, with Metal Through-Hole Hold-down

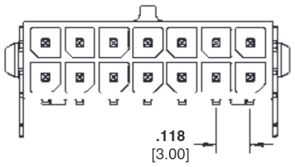

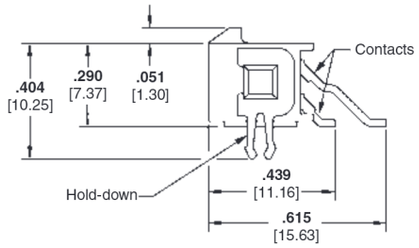

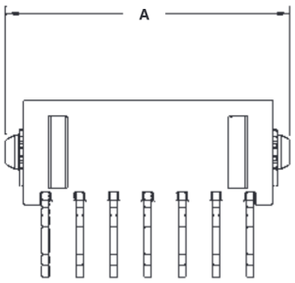

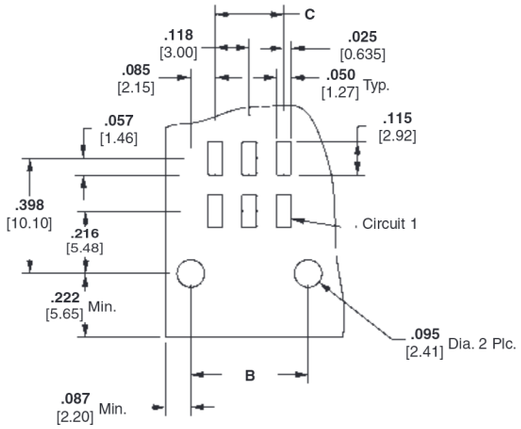

Recommended PC Board Layout*

Material and Finish

Housing — High Temperature Nylon, Black

Flammability Rating — UL 94V-0

Contacts—Brass

Plating A—.000100 [0.00254] min. tin over .000050 [0.00127] min. nickel

Plating B—.000015 [0.00038] gold in mating area, .000100 [0.00254] min. tin in solder area, with entire contact underplated .000050 [0.00127] min. nickel

Plating C—.000030 [0.00076] gold in mating area, .000100 [0.00254] min. tin in solder area, with entire contact underplated .000050 [0.00127] min. nickel

Hold-downs—Phosphor Bronze, .000100 [0.00254] min. tin over .000050 [0.00127] min. nickel

Related Product Data

Mateable Housings:

Dual Row Receptacle Housing—page 24

Number of Circuits	Dimensions			Header Part Numbers			Mates with Receptacle Housing Part Number
	A	B	C	Plating A	Plating B	Plating C	
2	**.276** 7.00	**.169** 4.30	—	3-794624-2	3-794625-2	3-794626-2	794617-2
4	**.394** 10.00	**.287** 7.30	**.118** 3.00	3-794624-4	3-794625-4	3-794626-4	794617-4
6	**.512** 13.00	**.406** 10.30	**.236** 6.00	3-794624-6	3-794625-6	3-794626-6	794617-6
8	**.630** 16.00	**.524** 13.30	**.354** 9.00	3-794624-8	3-794625-8	3-794626-8	794617-8
10	**.748** 19.00	**.642** 16.30	**.472** 12.00	4-794624-0	4-794625-0	4-794626-0	1-794617-0
12	**.866** 22.00	**.760** 19.30	**.591** 15.00	4-794624-2	4-794625-2	4-794626-2	1-794617-2
14	**.984** 25.00	**.878** 22.30	**.709** 18.00	4-794624-4	4-794625-4	4-794626-4	1-794617-4
16	**1.102** 28.00	**.996** 25.30	**.827** 21.00	4-794624-6	4-794625-6	4-794626-6	1-794617-6
18	**1.220** 31.00	**1.114** 28.30	**.945** 24.00	4-794624-8	4-794625-8	4-794626-8	1-794617-8
20	**1.339** 34.00	**1.232** 31.30	**1.063** 27.00	5-794624-0	5-794625-0	5-794626-0	2-794617-0
22	**1.457** 37.00	**1.350** 34.30	**1.181** 30.00	5-794624-2	5-794625-2	5-794626-2	2-794617-2
24	**1.575** 40.00	**1.469** 37.30	**1.299** 33.00	5-794624-4	5-794625-4	5-794626-4	2-794617-4

*Recommended PC Board thickness .062 [1.57]. Always consult customer drawing for PC Board layout dimensions.

Note: All part numbers are RoHS Compliant.

Catalog 82181
Revised 4-08

https://cwindustrial.co.za/

Dimensions are in inches and millimeters unless otherwise specified. Values in brackets are metric equivalents.

Dimensions are shown for reference purposes only. Specifications subject to change.

USA: 1-800-522-6752
Canada: 1-905-470-4425
Mexico: 01-800-733-8926
C. America: 52-55-1106-0803

South America: 55-11-2103-6000
Hong Kong: 852-2735-1628
Japan: 81-44-844-8013
UK: 44-8706-080-208

High Density Catalog.pdf 1 05/04/2022 14:12:09

Micro MATE-N-LOK 3 mm Connector System (Continued)

Right-Angle Header Assemblies (Continued)

Dual Row, Surface Mount, with Plastic Boardlock

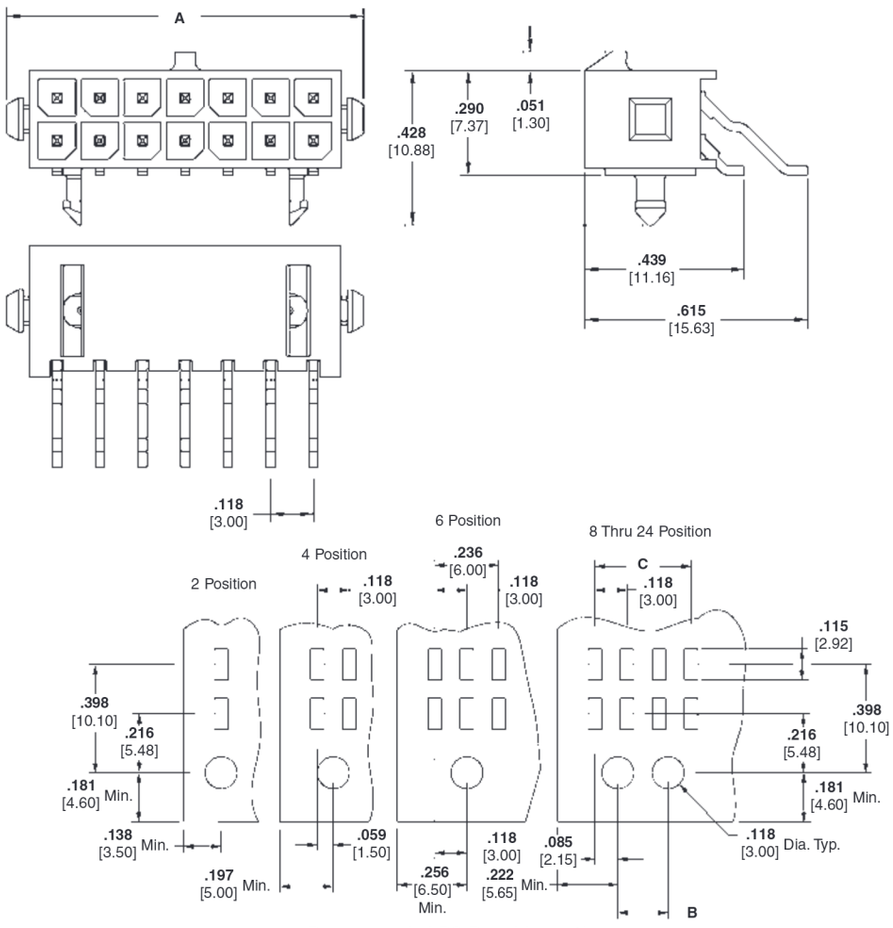

Recommended PC Board Layout*

Material and Finish

Housing — High Temperature Nylon, Black

Flammability Rating — UL 94V-0

Contacts—Brass

Plating A—.000100 [0.00254] min. tin over .000050 [0.00127] min. nickel

Plating B—.000015 [0.00038] gold in mating area, .000100 [0.00254] min. tin in solder area, with entire contact underplated .000050 [0.00127] min. nickel

Plating C—.000030 [0.00076] gold in mating area, .000100 [0.00254] min. tin in solder area, with entire contact underplated .000050 [0.00127] min. nickel

Related Product Data

Mateable Housings:

Dual Row Receptacle Housing—page 24

Number of Circuits	Dimensions			Header Part Numbers			Mates with Receptacle Housing Part Number
	A	B	C	Plating A	Plating B	Plating C	
2	**.276** 7.00	—	—	3-794621-2	3-794622-2	3-794623-2	794617-2
4	**.394** 10.00	—	**.118** 3.00	3-794621-4	3-794622-4	3-794623-4	794617-4
6	**.512** 13.00	—	**.236** 6.00	3-794621-6	3-794622-6	3-794623-6	794617-6
8	**.630** 16.00	**.185** 4.70	**.354** 9.00	3-794621-8	3-794622-8	3-794623-8	794617-8
10	**.748** 19.00	**.303** 7.70	**.472** 12.00	4-794621-0	4-794622-0	4-794623-0	1-794617-0
12	**.866** 22.00	**.421** 10.70	**.591** 15.00	4-794621-2	4-794622-2	4-794623-2	1-794617-2
14	**.984** 25.00	**.539** 13.70	**.709** 18.00	4-794621-4	4-794622-4	4-794623-4	1-794617-4
16	**1.102** 28.00	**.657** 16.70	**.827** 21.00	4-794621-6	4-794622-6	4-794623-6	1-794617-6
18	**1.220** 31.00	**.776** 19.70	**.945** 24.00	4-794621-8	4-794622-8	4-794623-8	1-794617-8
20	**1.339** 34.00	**.894** 22.70	**1.063** 27.00	5-794621-0	5-794622-0	5-794623-0	2-794617-0
22	**1.457** 37.00	**1.012** 25.70	**1.181** 30.00	5-794621-2	5-794622-2	5-794623-2	2-794617-2
24	**1.575** 40.00	**1.130** 28.70	**1.299** 33.00	5-794621-4	5-794622-4	5-794623-4	2-794617-4

*Recommended PC Board thickness .062 [1.57]. Always consult customer drawing for PC Board layout dimensions.

Note: All part numbers are RoHS Compliant.

Catalog 82181
Revised 4-08

https://cwindustrial.co.za/

Dimensions are in inches and millimeters unless otherwise specified. Values in brackets are metric equivalents.

Dimensions are shown for reference purposes only. Specifications subject to change.

USA: 1-800-522-6752
Canada: 1-905-470-4425
Mexico: 01-800-733-8926
C. America: 52-55-1106-0803

South America: 55-11-2103-6000
Hong Kong: 852-2735-1628
Japan: 81-44-844-8013
UK: 44-8706-080-208

High Density Catalog.pdf 1 05/04/2022 14:12:30

Micro MATE-N-LOK 3 mm Connector System (Continued)

Right-Angle Header Assemblies (Continued)

Dual Row, Surface Mount, with Surface Mount Hold-down

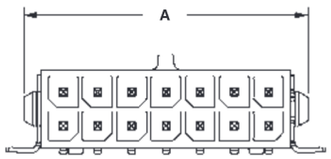

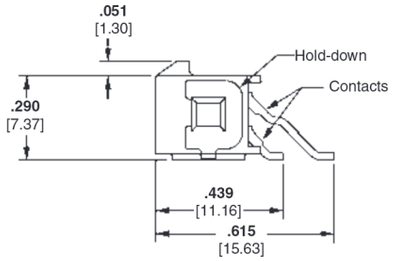

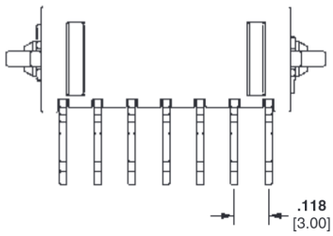

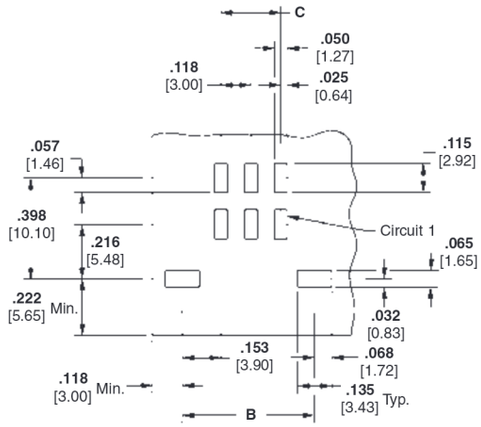

Recommended PC Board Layout*

Material and Finish

Housing — High Temperature Nylon, Black

Flammability Rating — UL 94V-0

Contacts—Brass

Plating A—.000100 [0.00254] min. tin over .000050 [0.00127] min. nickel

Plating B—.000015 [0.00038] gold in mating area, .000100 [0.00254] min. tin in solder area, with entire contact underplated .000050 [0.00127] min. nickel

Plating C—.000030 [0.00076] gold in mating area, .000100 [0.00254] min. tin in solder area, with entire contact underplated .000050 [0.00127] min. nickel

Hold-downs—Phosphor Bronze, .000100 [0.00254] min. tin over .000050 [0.00127] min. nickel

Related Product Data

Mateable Housings:

Dual Row Receptacle Housing—page 24

Number of Circuits	Dimensions			Header Part Numbers			Mates with Receptacle Housing Part Number
	A	B	C	Plating A	Plating B	Plating C	
2	**.276** 7.00	**.276** 7.27	—	3-794627-2	3-794628-2	3-794629-2	794617-2
4	**.394** 10.00	**.394** 10.27	**.118** 3.00	3-794627-4	3-794628-4	3-794629-4	794617-4
6	**.512** 13.00	**.512** 13.27	**.236** 6.00	3-794627-6	3-794628-6	3-794629-6	794617-6
8	**.630** 16.00	**.630** 16.27	**.354** 9.00	3-794627-8	3-794628-8	3-794629-8	794617-8
10	**.748** 19.00	**.748** 19.27	**.472** 12.00	4-794627-0	4-794628-0	4-794629-0	1-794617-0
12	**.866** 22.00	**.866** 22.27	**.591** 15.00	4-794627-2	4-794628-2	4-794629-2	1-794617-2
14	**.984** 25.00	**.984** 25.27	**.709** 18.00	4-794627-4	4-794628-4	4-794629-4	1-794617-4
16	**1.102** 28.00	**1.102** 28.27	**.827** 21.00	4-794627-6	4-794628-6	4-794629-6	1-794617-6
18	**1.220** 31.00	**1.220** 31.27	**.945** 24.00	4-794627-8	4-794628-8	4-794629-8	1-794617-8
20	**1.339** 34.00	**1.339** 34.27	**1.063** 27.00	5-794627-0	5-794628-0	5-794629-0	2-794617-0
22	**1.457** 37.00	**1.457** 37.27	**1.181** 30.00	5-794627-2	5-794628-2	5-794629-2	2-794617-2
24	**1.575** 40.00	**1.575** 40.27	**1.299** 33.00	5-794627-4	5-794628-4	5-794629-4	2-794617-4

*Always consult customer drawing for PC Board layout dimensions.

Note: All part numbers are RoHS Compliant.

Catalog 82181
Revised 4-08

https://cwindustrial.co.za/

Dimensions are in inches and millimeters unless otherwise specified. Values in brackets are metric equivalents.

Dimensions are shown for reference purposes only. Specifications subject to change.

USA: 1-800-522-6752
Canada: 1-905-470-4425
Mexico: 01-800-733-8926
C. America: 52-55-1106-0803

South America: 55-11-2103-6000
Hong Kong: 852-2735-1628
Japan: 81-44-844-8013
UK: 44-8706-080-208

High Density Catalog.pdf 1 05/04/2022 14:12:56

Engineering Notes

Catalog 82181
Revised 4-08

https://cwindustrial.co.za/

Dimensions are in inches and millimeters unless otherwise specified. Values in brackets are metric equivalents.

Dimensions are shown for reference purposes only. Specifications subject to change.

USA: 1-800-522-6752
Canada: 1-905-470-4425
Mexico: 01-800-733-8926
C. America: 52-55-1106-0803

South America: 55-11-2103-6000
Hong Kong: 852-2735-1628
Japan: 81-44-844-8013
UK: 44-8706-080-208

High Density Catalog.pdf 1 05/04/2022 14:25:39

Grace Inertia Connectors (GIC), 3.5 mm Centerline (Wire-to-Wire Connectors)

Product Facts

- Small wire-to-wire connectors (3.5 mm centerline) can handle 18 AWG wire
- Locking mechanism helps prevent connectors from being disconnected during movement or transportation
- Four kinds of keying per color-coded housing
- Improved housing shape offers easier mating
- Complies with lead free requirements
- Recognized under the Component Program of Underwriters Laboratories Inc., File No. E28476
- Certified by Canadian Standards Association, File No. E28476

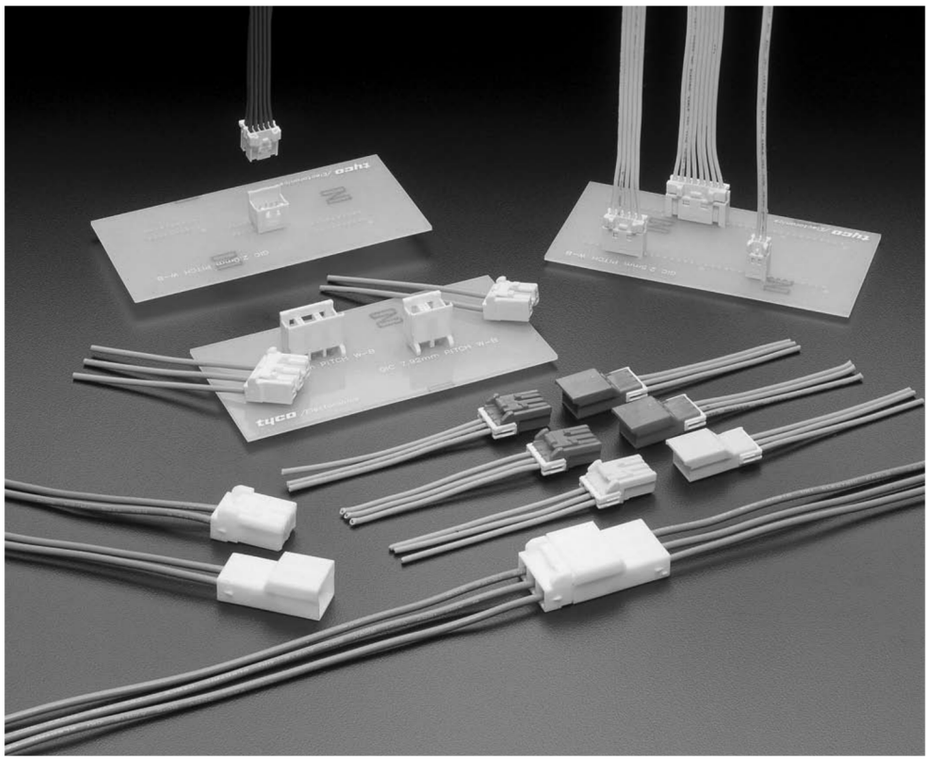

This connector employs the inertia locking mechanism, which simultaneously locks when mated to help prevent mismating. It is widely used for large-sized household electric appliances, such as refrigerators, washing machines, or dispensers. Depending on the working environment, a locking sound is difficult to confirm during mating of a connector. However, this connector supports secure mating operation even in such a working environment.

Performance Characteristics

Voltage Rating—300 VAC
Current Rating—7 A (max.)
Centerline—3.5 mm
Applicable Wire—26 to 18 AWG
Temperature Rating—-30˚C to 105˚C

Material and Finish

Housing—6/6 Nylon UL94V-0 (CTI 600 V or more)
Terminal—Pre-tin Copper alloy

Technical Documents

Product Specification
108-5810
Application Specification
114-5306

Note: All dimensions shown are metric.

Catalog 82181
Revised 4-08

https://cwindustrial.co.za/

Dimensions are in inches and millimeters unless otherwise specified. Values in brackets are metric equivalents.

Dimensions are shown for reference purposes only. Specifications subject to change.

USA: 1-800-522-6752
Canada: 1-905-470-4425
Mexico: 01-800-733-8926
C. America: 52-55-1106-0803
South America: 55-11-2103-6000
Hong Kong: 852-2735-1628
Japan: 81-44-844-8013
UK: 44-8706-080-208

High Density Catalog.pdf 1 05/04/2022 14:25:58

Grace Inertia Connectors (GIC), 3.5 mm Centerline (Wire-to-Wire Connectors) (Continued)

Contacts

Material and Finish

Pre-tinned Copper Alloy

Receptacle Contact (For Plug Housing)

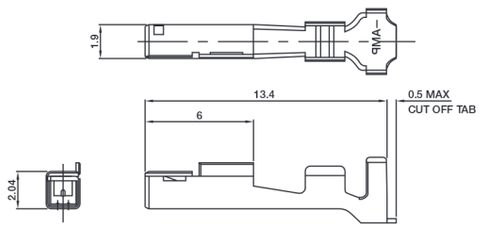

Tab Contact (For Cap Housing)

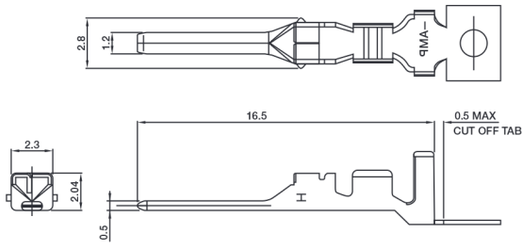

Wire Range		Insulation Dia. mm	Contact Part Number		Tool Part Number	
AWG	mm²		Receptacle	Tab	Terminator/Applicator	CERTI-CRIMP Hand Tool
26-22	0.13-0.34	1.3-2.0	1612334-1	1612335-1	**	——
22-18	0.3-0.9	1.5-2.7	1565079-1	1565080-1	**	1596277-1

*Cut the contact carrier strip when using a hand tool.

** Contact the Tooling Assistance Center (TAC) at 1-800-722-1111 for Terminator or Applicator Part Numbers.

Double Lock Plates

Material

6/6 Nylon glass filled (UL94V-0)

2 Position

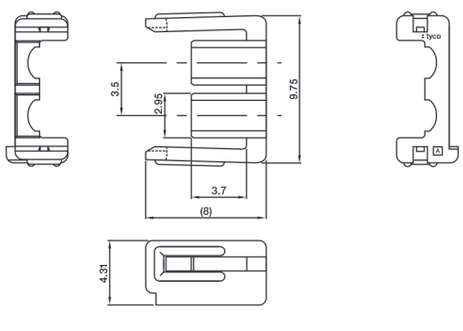

P/N 1565089-1
*Two four-positions are used.

3 Position

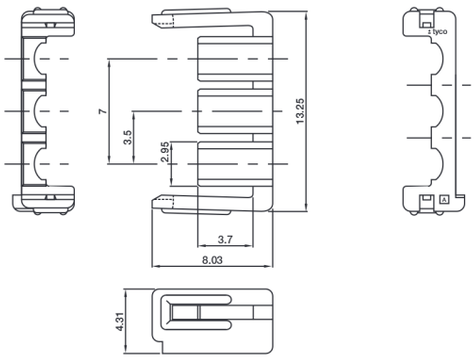

P/N 1565090-1
*Two six-positions are used.

Note: All dimensions shown are metric.

Note: All part numbers are RoHS Compliant.

Catalog 82181
Revised 4-08

https://cwindustrial.co.za/

Dimensions are in inches and millimeters unless otherwise specified. Values in brackets are metric equivalents.

Dimensions are shown for reference purposes only. Specifications subject to change.

USA: 1-800-522-6752
Canada: 1-905-470-4425
Mexico: 01-800-733-8926
C. America: 52-55-1106-0803

South America: 55-11-2103-6000
Hong Kong: 852-2735-1628
Japan: 81-44-844-8013
UK: 44-8706-080-208

High Density Catalog.pdf 1 05/04/2022 14:26:52

Grace Inertia Connectors (GIC), 3.5 mm Centerline (Wire-to-Wire Connectors) (Continued)

2 Position

Material

6/6 Nylon, UL94V-0 (CTI 600 V or more)

Plug Housing (For Receptacles)

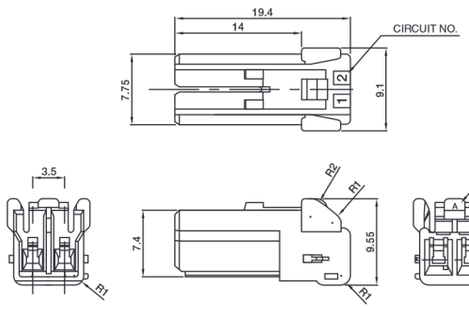

Cap Housing (For Tabs)

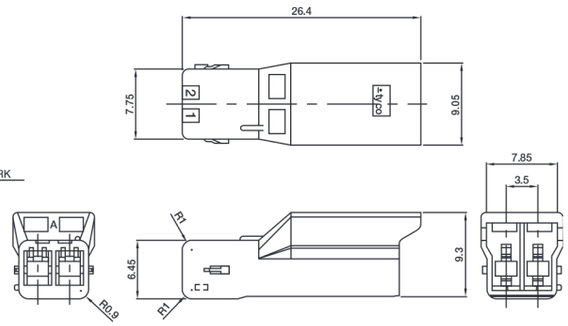

Related Product Data

Receptacle and Tab Contacts—page 50
Double Lock Plate—page 50

Color	Keying	Part Number	
		Plug Housing	Cap Housing
Natural	A	1565081-1	1565085-1
Red	B	1-1565081-2	1-1565085-2
Blue	C	2-1565081-3	2-1565085-3
Yellow	D	3-1565081-4	3-1565085-4

3 Position

Material

6/6 Nylon, UL94V-0 (CTI 600 V or more)

Plug Housing (For Receptacles)

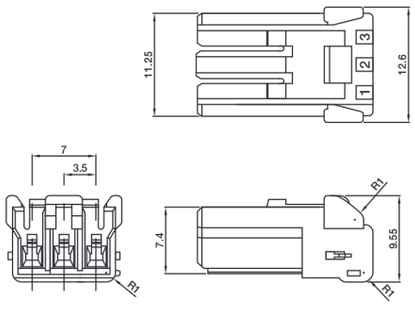

Cap Housing (For Tabs)

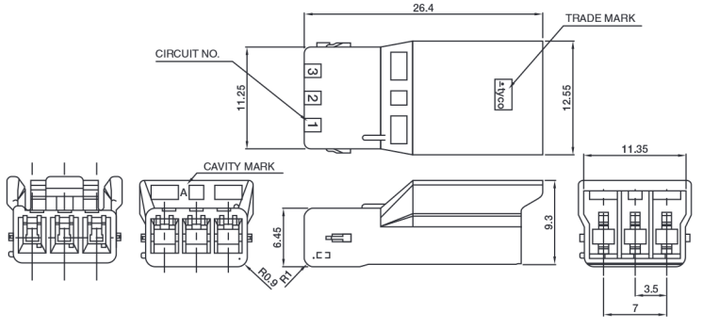

Color	Keying	Part Number	
		Plug Housing	Cap Housing
Natural	A	1565082-1	1565086-1
Red	B	1-1565082-2	1-1565086-2
Blue	C	2-1565082-3	2-1565086-3
Yellow	D	3-1565082-4	3-1565086-4

Note: All dimensions shown are metric.

Note: All part numbers are RoHS Compliant.

Catalog 82181
Revised 4-08

https://cwindustrial.co.za/

Dimensions are in inches and millimeters unless otherwise specified. Values in brackets are metric equivalents.

Dimensions are shown for reference purposes only. Specifications subject to change.

USA: 1-800-522-6752
Canada: 1-905-470-4425
Mexico: 01-800-733-8926
C. America: 52-55-1106-0803

South America: 55-11-2103-6000
Hong Kong: 852-2735-1628
Japan: 81-44-844-8013
UK: 44-8706-080-208

High Density Catalog.pdf 1 05/04/2022 14:27:28

Grace Inertia Connectors (GIC), 3.5 mm Centerline (Wire-to-Wire Connectors) (Continued)

4 Position

Plug Housing (For Receptacles)

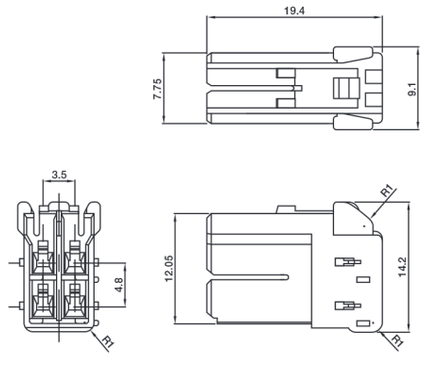

Cap Housing (For Tabs)

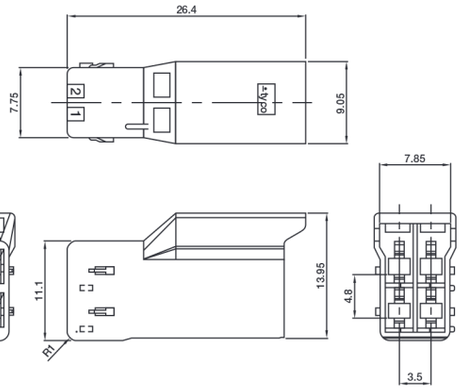

Material

6/6 Nylon, UL94V-0 (CTI 600 V or more)

Related Product Data

Receptacle and Tab Contacts—page 50
Double Lock Plate—page 50

Color	Keying	Part Number	
		Plug Housing	Cap Housing
Natural	A	1565083-1	1565087-1
Red	B	1-1565083-2	1-1565087-2
Blue	C	2-1565083-3	2-1565087-3
Yellow	D	3-1565083-4	3-1565087-4

6 Position

Plug Housing (For Receptacles)

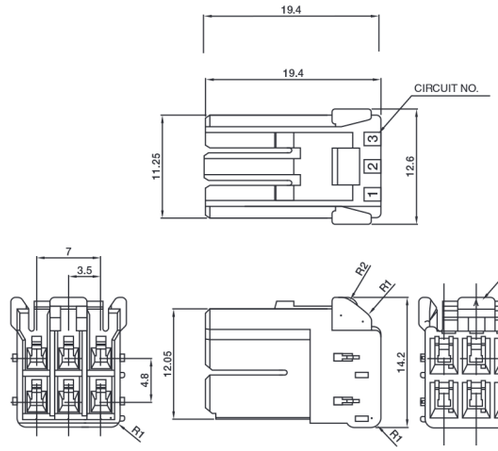

Cap Housing (For Tabs)

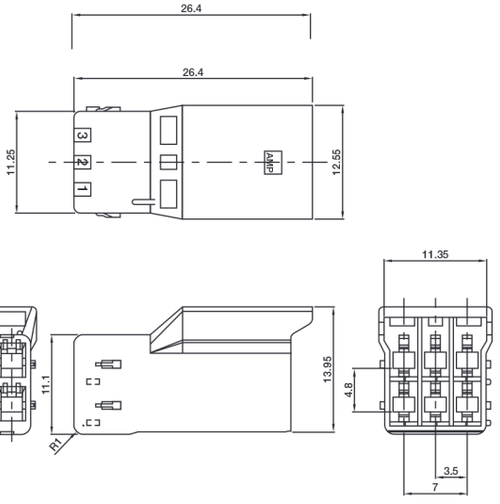

Material

6/6 Nylon, UL94V-0 (CTI 600 V or more)

Color	Keying	Part Number	
		Plug Housing	Cap Housing
Natural	A	1565084-1	1565088-1
Red	B	1-1565084-2	1-1565088-2
Blue	C	2-1565084-3	2-1565088-3
Yellow	D	3-1565084-4	3-1565088-4

Note: All dimensions shown are metric.

Note: All part numbers are RoHS Compliant.

Catalog 82181
Revised 4-08

https://cwindustrial.co.za/

Dimensions are in inches and millimeters unless otherwise specified. Values in brackets are metric equivalents.

Dimensions are shown for reference purposes only. Specifications subject to change.

USA: 1-800-522-6752
Canada: 1-905-470-4425
Mexico: 01-800-733-8926
C. America: 52-55-1106-0803

South America: 55-11-2103-6000
Hong Kong: 852-2735-1628
Japan: 81-44-844-8013
UK: 44-8706-080-208

High Density Catalog.pdf 1 05/04/2022 14:35:57

.062 [1.57] Commercial Pin and Socket Connectors

Product Facts

- Polarized
- Cavity identification
- Low contact-mating force
- Dual locking lances
- Detent and positive locking
- Contacts available in brass and phosphor bronze with tin and gold plating
- Panel mount and free-hanging styles
- "F" crimp contacts
- Applicator and hand tool available
- Economical commercial-grade connectors
- Compatible with high-speed application machinery and most other manufacturers' soft shells
- Wire range 30 to 18 AWG [0.05 to 0.9 mm²]
- Accepts wires with insulation diameters as large as .110 [2.79]
- Housings available in 1 to 9 positions
- .062 plug and receptacle housings accept pin or socket contacts. The preferred convention is to use socket contacts with receptacle housings
- Not for interrupting current
- Recognized under the Component Program of Underwriters Laboratories Inc., File No. E28476
- Certified by Canadian Standards Association, File No. LR 7189

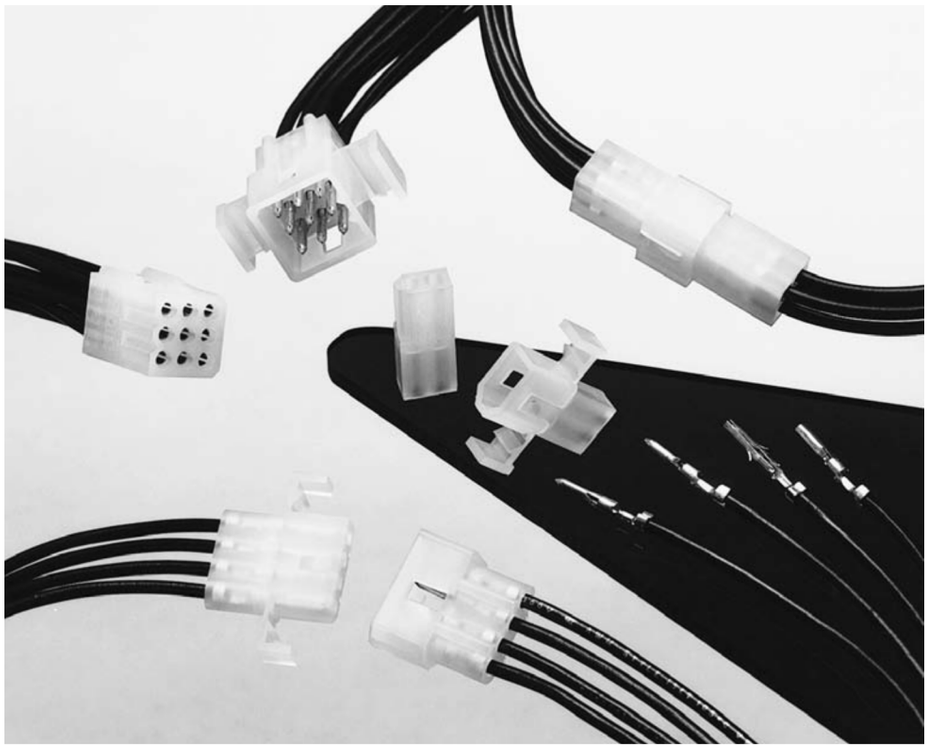

Performance Characteristics

The .062 Commercial Pin and Socket Connectors performance characteristics found on pages 53-54 are based on free-hanging and panel mount connectors, loaded with contacts crimped on stranded wire.

Durability—10 mating cycles

Dielectric Withstanding Voltage—1.0 kVAC

Insulation Resistance—1000 megohms min. initial

Voltage Rating—250 V AC or DC

Connector Mating—2.5 lb. [11.1 N] max. per contact

Connector Unmating—0.3 lb. [1.3 N] min. per contact

Contact Insertion Force—4.0 lb. [17.8 N] max. per contact

Contact Retention—7 lb. [31.1 N] min.

15 lb. [66.6 N] min. for contacts 770983-1 and 794380-1

Technical Documents

Product Specification
108-1037 .062 Commercial Pin and Socket Connectors

Application Specification
114-1013 .062 Commercial Pin and Socket Connectors

Catalog 82181
Revised 4-08

https://cwindustrial.co.za/

Dimensions are in inches and millimeters unless otherwise specified. Values in brackets are metric equivalents.

Dimensions are shown for reference purposes only. Specifications subject to change.

USA: 1-800-522-6752
Canada: 1-905-470-4425
Mexico: 01-800-733-8926
C. America: 52-55-1106-0803

South America: 55-11-2103-6000
Hong Kong: 852-2735-1628
Japan: 81-44-844-8013
UK: 44-8706-080-208

High Density Catalog.pdf 1 05/04/2022 14:36:35

.062 [1.57] Commercial Pin and Socket Connectors (Continued)

Performance Characteristics (Continued)

Maximum Current—Maximum current rating of .062 Commercial Pin and Socket connectors is limited by the maximum operating temperature of the housings which is 105°C including the temperature rise of the contacts which is a maximum of 30°C. There are several variables which have a direct effect on this maximum current-carrying capability for a given connector and must be considered for each application. These variables are:

Wire Size—Larger wire will carry more current since it has less internal resistance to current flow and thus generates less heat. Longer wire lengths also enhance current-carrying capabilities since the wire conducts heat away from the connector.

Connector Size—In general, the more circuits in a connector, the less current can be carried.

Ambient Temperature—The higher the ambient temperature, the less current can be carried in any given connector.

Related Product Data

Product Specification—
108-1037

Application Specification—
114-1013

Current Rating Verification for 30°C Maximum Temperature Rise 100% Energized

Wire-to-Wire
.062 Commercial Pin and Socket Connectors Calculated Current Table

Number of Circuits	Wire Gauge			
	18	20	22	24
2	7.00	6.00	5.00	4.00
3	7.00	6.00	5.00	4.00
4	6.00	6.00	5.00	4.00
4	6.00	5.00	4.00	3.00
6	6.00	5.00	4.00	3.00
9	5.00	4.00	4.00	3.00

Values are based on initial Temperature Rise versus Current Testing and are intended to be a guide in the selection of a connector family. All applications should be tested by the end user. The values listed are per circuit for fully loaded housings being 100% energized. **Note:** All combinations were not tested, and this chart contains interpolated and extrapolated values.

Minimum Wire Lengths for T-Rise vs. Current Testing

AWG	Min. Length (in.)	AWG	Min. Length (in.)
30	2.6	18	9.4
28	3.2	16	11.3
26	4.1	14	13.7
24	5.1	12	16.4
20	7.8	10	19.3

Note: If wire lengths used are less than those listed above, the current-carrying ability of the system will be reduced due to less heat being conducted away from the connector. The customer should fully test all applications.

Termination Resistance/Contact Crimp Tensile Force

Wire Size		Termination Resistance		Contact Crimp Tensile Force	
AWG	mm^2	Test Current (Amps)	Resistance Milliohms (Max. Init.)	Force (Min.) lbs.	Force (Min.) N
24	0.2	1.5	3.50	10	44.5
22	0.3–0.4	3.0	3.50	10	44.5
20	0.5–0.6	4.5	3.00	13	57.8
18	0.8–0.9	6.0	3.00	14	62.3

Note: This is the total resistance between wire crimps of a mated pin and socket.

Catalog 82181
Revised 4-08

https://cwindustrial.co.za/

Dimensions are in inches and millimeters unless otherwise specified. Values in brackets are metric equivalents.

Dimensions are shown for reference purposes only. Specifications subject to change.

USA: 1-800-522-6752
Canada: 1-905-470-4425
Mexico: 01-800-733-8926
C. America: 52-55-1106-0803

South America: 55-11-2103-6000
Hong Kong: 852-2735-1628
Japan: 81-44-844-8013
UK: 44-8706-080-208

High Density Catalog.pdf 1 05/04/2022 14:36:54

.062 [1.57] Commercial Pin and Socket Connectors (Continued)

Contacts

Pin Diameter .062 [1.57]

Material

.008 [0.20] Stock Thickness

Pin and socket contacts can be used in either plug or receptacle housings. It is preferred to use socket contacts in receptacle housings.

Related Product Data

Performance Characteristics—pages 53-54
Housings—pages 56-57
Panel Cutouts—page 57
Technical Documents—pages 53 and 205-206
Application Tooling—pages 207-210

Product Specification—108-1037-1

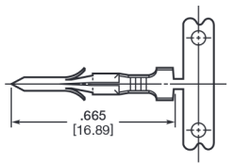

Pin

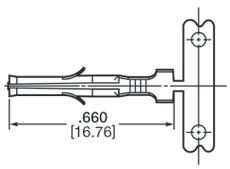

Socket

Wire Size AWG	Wire Size mm²	Ins. Dia.	Material & Finish	Contact Part Numbers Pin Strip Form	Pin Loose Pieces	Socket Strip Form	Socket Loose Pieces	HDM Applicator Part No.	Hand Tool Part No.
30-24	0.05-0.2	**.060** 1.52 Max.	Brass Pre-tin	640391-1	794018-1	640392-1	794019-1	466686-1[3] 466686-2[3] 466686-3[3]	90870-1
				—	—	794046-1[2]	—		
			Brass, Select Gold[1]	640391-5[1]	—	640392-5[1]	—		
			Phos. Brz., Pre-tin	—	—	640392-2	—		
24-18	0.2-0.9	**.050-.110** 1.27-2.79	Brass Pre-tin	350629-1	794017-1	350628-1	794016-1	687996-1[3] 687996-2[3] 687996-3[3]	90869-1
				770983-1[4]	—	794380-1[4]	—		
						794103-1[2]			
			Phos. Brz., Pre-tin	350629-8	—	350628-2	—		
			Brass, Select Gold[1]	350629-5[1]	—	350628-5[1]	—		
			Phos. Brz., Select Gold[1]	—	—	350628-6[1]	—		

[1]Select Gold—.000030 [.000762] min. in mating area over .000050 [.00127] nickel.
[2]Lanceless Socket for Overmolding.
[3]HDM Applicator part number ending in -1 is used on AMPOMATOR CLS Machine with T or G Terminators, -2 is used on AMP-O-LECTRIC Model K Machine, -3 is used on AMP-O-LECTRIC Model G Machine. See pages 207-210 for further information.
[4]Contact Retention 15 lbs. [66.6 N] min.

Note: Phosphor bronze contacts should be used in high-temperature/humidity cycling applications.

Note: All part numbers are RoHS Compliant.



Contact Insertion Tool (for Pins and Sockets) Part No. 91002-1 IS 408-7347



Contact Extraction Tool Part No. 318831-1 IS 408-4370

Catalog 82181
Revised 4-08
https://cwindustrial.co.za/

Dimensions are in inches and millimeters unless otherwise specified. Values in brackets are metric equivalents.

Dimensions are shown for reference purposes only. Specifications subject to change.

USA: 1-800-522-6752
Canada: 1-905-470-4425
Mexico: 01-800-733-8926
C. America: 52-55-1106-0803
South America: 55-11-2103-6000
Hong Kong: 852-2735-1628
Japan: 81-44-844-8013
UK: 44-8706-080-208

High Density Catalog.pdf 1 05/04/2022 14:37:14

.062 [1.57] Commercial Pin and Socket Connectors (Continued)

Housings

Free-Hanging or Panel Mount

.145 [3.68] Centerline spacing

Material

Housing—Nylon, natural color
Flammability Rating—UL94V-2

Related Product Data

Contacts—page 55
Product Specification—108-1037

1 Circuit

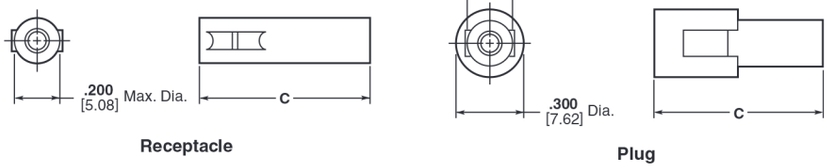

Receptacle

Plug

2, 3, and 4 Circuit, In-Line

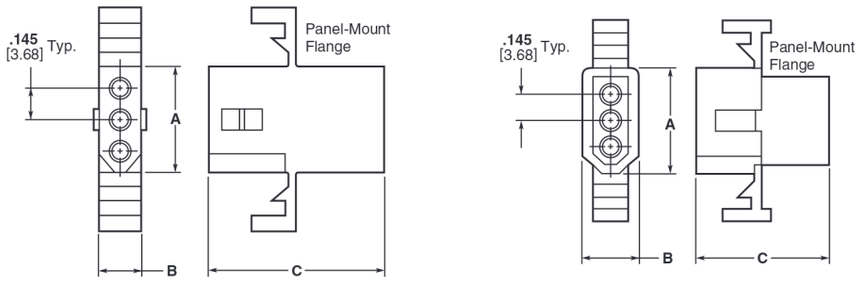

Receptacle

Plug

No. of Circuits	Dimensions						Receptacle Part Numbers		Plug Part Numbers	
	Receptacle			Plug			Panel Mount	Free-Hanging	Panel Mount	Free-Hanging
	A	B	C	A	B	C				
1	—	—	.785 19.94	—	—	.750 19.05	—	770277-1	—	770278-1
2	.340 8.64	.199 5.05	.820 20.83	.440 11.18	.300 7.62	.780 19.81	770343-1	770342-1 770419-11	770341-1	770340-1
3	.490 12.45	.199 5.05	.785 19.94	.590 14.99	.300 7.62	.750 19.05	770326-1	770333-1	770332-1	770331-1
4 (In-Line)	.635 16.13	.199 5.05	.785 19.94	.733 18.62	.300 7.62	.750 19.05	770335-1	770274-1	770334-1	770275-1
4 (Matrix)	.345 8.76	.345 8.76	.878 22.30	.445 11.30	.445 11.30	.868 22.04	770441-1	770442-1	770443-1	770433-1
6	.345 8.76	.495 12.57	.785 19.94	.445 11.30	.600 15.24	.750 19.05	770354-1	770356-1	770353-1	770355-1
9	.490 12.45	.495 12.57	.790 20.07	.590 14.99	.600 15.24	.750 19.05	770427-1	770429-1	770426-1	770428-1

[1]Positive Lock

Note: **All part numbers are RoHS Compliant.**

Catalog 82181
Revised 4-08

https://cwindustrial.co.za/

Dimensions are in inches and millimeters unless otherwise specified. Values in brackets are metric equivalents.

Dimensions are shown for reference purposes only. Specifications subject to change.

USA: 1-800-522-6752
Canada: 1-905-470-4425
Mexico: 01-800-733-8926
C. America: 52-55-1106-0803

South America: 55-11-2103-6000
Hong Kong: 852-2735-1628
Japan: 81-44-844-8013
UK: 44-8706-080-208

High Density Catalog.pdf 1 05/04/2022 14:37:34

.062 [1.57] Commercial Pin and Socket Connectors (Continued)

Housings

Free-Hanging or Panel Mount

.145 [3.68] Centerline spacing

Material

Housing — Nylon, natural color
Flammability Rating — UL94V-2

Related Product Data

Contacts — page 55

4, 6, and 9 Circuit, Matrix

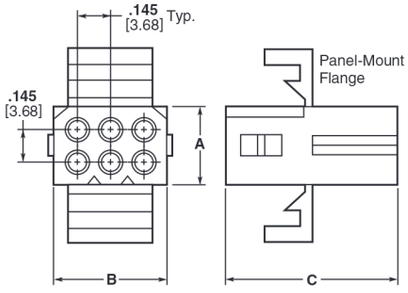

Receptacle

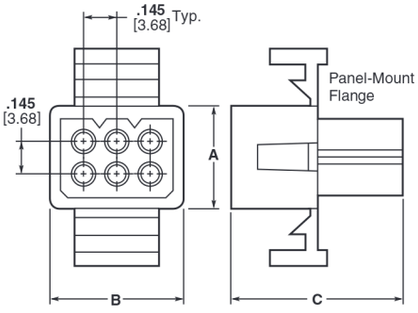

Plug

Recommended Panel Cutouts

Maximum panel thickness is .060 [1.52].

Related Product Data

Product Specification — 108-1037

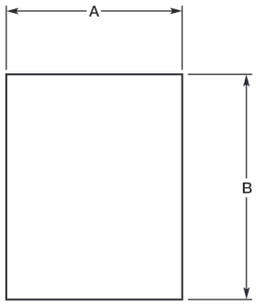

No. of Circuits	Panel Cutout Dimensions			
	Receptacle		Plug	
	A	B	A	B
2	**.265** 6.73	**.505** 12.83	**.318** 8.08	**.609** 15.47
3	**.265** 6.73	**.650** 16.51	**.318** 8.08	**.754** 19.15
4 (In-Line)	**.260** 6.60	**.785** 19.94	**.312** 7.92	**.865** 21.97
4 (Matrix)	**.400** 10.16	**.506** 12.85	**.465** 11.81	**.615** 15.62
6	**.505** 12.83	**.552** 14.02	**.607** 15.42	**.615** 15.62
9	**.552** 14.02	**.650** 16.51	**.615** 15.62	**.752** 19.10

Note: The panel should be punched so that the housing enters in the same direction as the punch.

Note: **All part numbers are RoHS Compliant.**

Catalog 82181
Revised 4-08

https://cwindustrial.co.za/

Dimensions are in inches and millimeters unless otherwise specified. Values in brackets are metric equivalents.

Dimensions are shown for reference purposes only. Specifications subject to change.

USA: 1-800-522-6752
Canada: 1-905-470-4425
Mexico: 01-800-733-8926
C. America: 52-55-1106-0803

South America: 55-11-2103-6000
Hong Kong: 852-2735-1628
Japan: 81-44-844-8013
UK: 44-8706-080-208

High Density Catalog.pdf 1 05/04/2022 14:37:52

Engineering Notes

Catalog 82181
Revised 4-08

https://cwindustrial.co.za/

Dimensions are in inches and millimeters unless otherwise specified. Values in brackets are metric equivalents.

Dimensions are shown for reference purposes only. Specifications subject to change.

USA: 1-800-522-6752
Canada: 1-905-470-4425
Mexico: 01-800-733-8926
C. America: 52-55-1106-0803

South America: 55-11-2103-6000
Hong Kong: 852-2735-1628
Japan: 81-44-844-8013
UK: 44-8706-080-208

High Density Catalog.pdf 1 05/04/2022 14:38:19

Power Double Lock (PDL) Connectors (Wire-to-Board and Wire-to-Wire)

Product Facts

- Power circuit connectors of compact design
- Uses double lock plate on the wire side that helps prevent partial mating of contacts
- Double lock plate compatible with high-count positions of more than 3 rows
- Tab and receptacle contacts resist scooping of contacts at mating / unmating
- Locking of plug to cap housings and plug to board-mounted headers made by the semi-inner locking system that helps preclude the possibility of disengagement by external pressure
- Both wire-to-wire and wire-to-board applications available from the same Series lineup
- Board-mounted header compatible with resin coating, causing no hindrance with the plug locking function
- Design complies with a range of safety standards
- The housing lance design provides no lance on contacts and helps prevent entanglement of contacts with one another
- Fully polarized
- The following contact centerline by row centerline arrangements available:
  - For wire-to-wire application:
    3.96 mm x 4.6 mm
    6.5 mm x 6.5 mm
  - For wire-to-board application:
    3.96 mm x 4.6 mm
    7.92 mm x 4.6 mm
    6.5 mm x 6.5 mm
- Recognized under the Component Program of Underwriters Laboratories Inc., File No. E28476
- Certified by Canadian Standards Association, File No. LR7189
- VDE Approved, File No. B 04 11 39175010

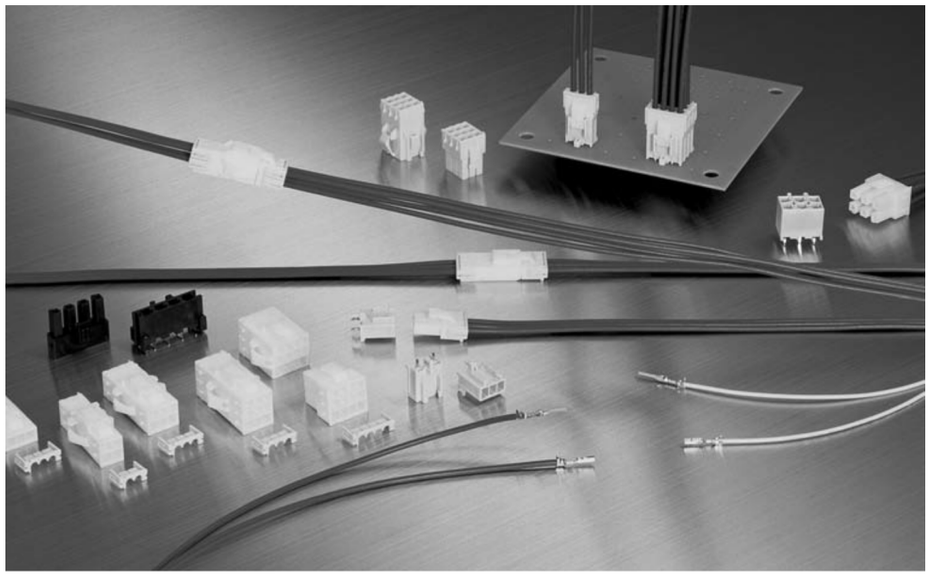

Power Double Lock Connectors are compact connectors designed for use in power circuit applications and are ideally suited for wiring in refrigerators, air conditioners, washing machines, gas equipment, copying machines and automatic vending machines. These connectors can be used alone by inserting wire-terminated crimp snap-in contacts into the housing. However, to achieve more positive contact mounting, plug and cap housings can be equipped with a double lock plate that helps to completely insert contacts. There are three contact centerline spacings available: 3.96 mm, 6.5 mm and 7.92 mm. Of these, the 7.92 mm centerline contact arrangement is for 2-position board-mounted headers. The mating wire-mounted plug connector uses the second circuit of the 3-position 3.96 mm centerline housing with no contact loaded. Available with the 3.96 mm centerline contact arrangement are wire-mounted plug housings and the mating wire-mounted cap housings (for free-hanging and panel mounted applications) and board-mounted tab headers.

The 6.5 mm centerline contact arrangement is used in wire-mounted plug housings and the mating board-mounted tab headers. The plug housings are loaded with receptacle contacts and the cap housings with tab contacts. The tab headers for board mounting are preloaded with solder-dipping tab contacts with tail.

Contacts accept two wire size ranges: 28-22 AWG (with insulation outer diameter of 1.3 to 2.0 mm) and 20-18 AWG (with insulation outer diameter of 2.0 to 3.1 mm).

The tab header for board mounting has a locking mechanism where it is compatible with resin coating that is applied to the board for waterproof.

It is designed to work with the plug locking function.

The solder tail section of tab contact has kink feature.

Interacting with the mounting boss with kink feature, the solder tab secures the header on the board firmly during soldering.

The double lock plate is compatible with high-count positions of more than 3 rows. Also, the housing lance design of this connector, featuring no lance on contacts, makes handling of the connector very easy, as there is minimal entanglement of contacts with one another.

Performance Characteristics

Voltage Rating—300 VAC (for 3.96 mm wire-to-wire, 6.5 mm wire-to-board and 7.92 mm wire-to-board applications)
50 VAC (for 3.96 mm wire-to-board application)

Current Rating—14A max. (Based on initial t-rise vs. current testing using 16 AWG wire in a 2-position connector

Fine Rating—1 mV, 1∝A min.

Operating Temperature—
-30° ~ +105°C

Technical Documents

Product Specifications
108-5410
108-5439 (SMT)

Application Specification
114-5175

Instruction Sheet
411-5638

Catalog 82181
Revised 4-08

https://cwindustrial.co.za/

Dimensions are in inches and millimeters unless otherwise specified. Values in brackets are metric equivalents.

Dimensions are shown for reference purposes only. Specifications subject to change.

USA: 1-800-522-6752
Canada: 1-905-470-4425
Mexico: 01-800-733-8926
C. America: 52-55-1106-0803

South America: 55-11-2103-6000
Hong Kong: 852-2735-1628
Japan: 81-44-844-8013
UK: 44-8706-080-208

High Density Catalog.pdf 1 05/04/2022 14:38:46

Power Double Lock (PDL) Connectors (Wire-to-Board and Wire-to-Wire) (Continued)

Quick Reference Chart for Mating Part Numbers

Quick Reference Chart

Plug Connector (Wire Side)			Mating Connectors (Wire and PC Board Mount Side)		
Housing		Part No. of Applicable Double Lock Plate	No. of Pos.	Part No. of Cap Housing and Tab Header	Part No. of Applicable Double Lock Plate
No. of Pos.	Part No.				
■ 3.96 mm and 7.92 mm Centerline					
1	316768-☐	316770-1x1	1	316769-☐ (Free-Hanging)	316770-1x1
2	177898-☐	177918-1x1	2	179463-☐ (Free-Hanging)	177918-1x1
				177906-☐ (Panel Mount)	
				179838-☐ (PC Board Mount)	—
3	177899-☐	177919-1x1	3	179464-☐ (Free-Hanging)	177919-1x1
				177907-☐ (Panel Mount)	
				179839-☐ (PC Board Mount)	
			2	179844-☐ (PC Board Mount 7.92 mm Centerline)	—
4 (1 Row)	316501-☐	177920-1x1	4	316502-☐ (Panel Mount)	177920-1x1
4 (2 Rows)	177900-☐	177918-1x2	4	179465-☐ (Free-Hanging)	177918-1x2
				177908-☐ (Panel Mount)	
				179840-☐ (PC Board Mount)	—
6	177901-☐	177919-1x2	6	179466-☐ (Free-Hanging)	177919-1x2
				177909-☐ (Panel Mount)	
				179841-☐ (PC Board Mount)	—
8	177902-☐	177920-1x2	8	179467-☐ (Free-Hanging)	177920-1x2
				917845-☐ (PC Board Mount)	
9	177903-☐	177919-1x3	9	177911-☐ (Panel Mount)	177919-1x3
10	177904-☐	177921-1x2	10	177912-☐ (Panel Mount)	177921-1x2
12	177905-☐	177920-1x3	12	177913-☐ (Panel Mount)	177920-1x3
				179843-☐ (PC Board Mount)	—
				1903720-1 (Free-Hanging)	177920-1x3
■ 6.5 mm and 13.0 mm Centerline					
2	1939344-1	316061-1x1	2	1939343-1 (Panel Mount)	—
3	179938-☐	316062-1x1	3	179846-☐ (PC Board Mount)	—
				179944-☐ (PC Board Mount/SMT)	
—	—	—	2	917745-☐ (PC Board Mount 13 mm Centerline)	—
				9139343-1-☐ (Panel Mount)	
4 (1 Row)	179939-☐	316063-1x1	4	179847-☐ (PC Board Mount)	—
				179945-☐ (PC Board Mount/SMT)	
4 (2 Rows)	179861-☐	316061-1x2		179848-☐ (PC Board Mount)	
				1903486-1 (Panel Mount)	
6	179862-☐	316062-1x2	6	179849-☐ (PC Board Mount)	—
				1903487-1 (Panel Mount)	
12	917354-☐	353891-1x2	12	917353-☐ (PC Board Mount)	—

*For details on 6.5 mm and 13.0 mm Centerline products, contact Technical Support

Note: All part numbers are RoHS Compliant.

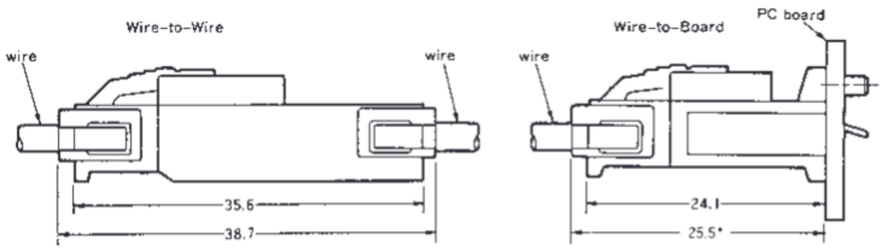

Note: All dimensions shown are metric.

Catalog 82181
Revised 4-08

https://cwindustrial.co.za/

Dimensions are in inches and millimeters unless otherwise specified. Values in brackets are metric equivalents.

Dimensions are shown for reference purposes only. Specifications subject to change.

USA: 1-800-522-6752
Canada: 1-905-470-4425
Mexico: 01-800-733-8926
C. America: 52-55-1106-0803

South America: 55-11-2103-6000
Hong Kong: 852-2735-1628
Japan: 81-44-844-8013
UK: 44-8706-080-208

High Density Catalog.pdf 1 05/04/2022 14:40:50

Power Double Lock (PDL) Connectors (Wire-to-Board and Wire-to-Wire) (Continued)

Contacts and Product Composition

Contacts

Material and Finish

Pre-tinned copper alloy

Receptacle for Plug Housing,
Tab for Cap Housing

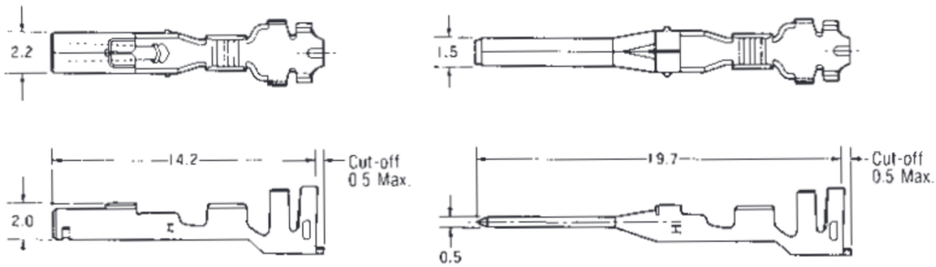

Receptacle Tab

Wire Range		Ins. Dia. (Note)	Contact Part No.				Applicator Part No.	CERTI-CRIMP II Hand Tool Part No.
			Receptacle		Tab			
AWG	mm²		Strip Form	Loose Piece	Strip Form	Loose Piece		
26-22	0.14~0.34	1.30~2.00	177914-1	179592-1	177916-1	179594-1	680283-X	91567-1
			177914-2*	179592-2*				
20-16	0.51~1.38	2.00~3.10	177915-1	179593-1	177917-1	179595-1	680286-X	91569-1
			177915-2*	179593-2*				

Note: Maximum diameter is 2.8 mm when Double Lock Plate is used.

*Part Number suffix -2 represents high contact pressure type.

Extraction Tool P/N : 234912-1 (For receptacle contact)
234914-1 (For tab contact)

Note: Contact the Tooling Assistance Center (TAC) at 1-800-722-1111 for Applicator Part Number.

Positive mounting achieved with Double Lock mechanism.



① **Contact is partially-mounted.**



② **Double Lock Plate is set.**



③ **Contact is fully pushed in as Double Lock Plate is pressed.**

Product Composition

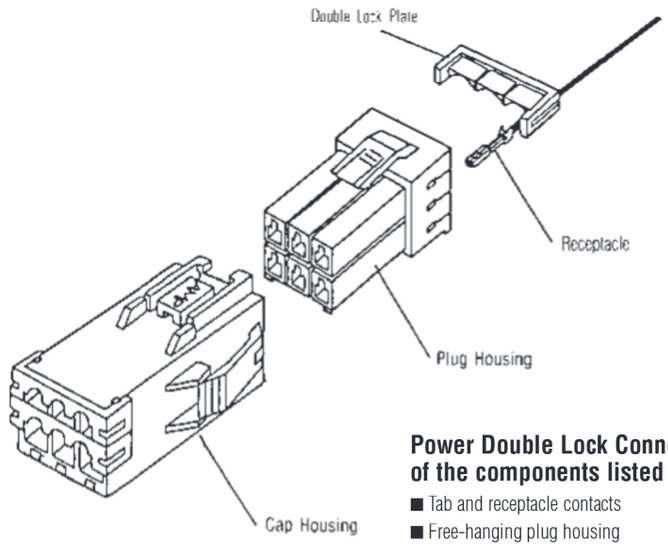

Power Double Lock Connector is composed of the components listed below:

- Tab and receptacle contacts
- Free-hanging plug housing
- Free-hanging cap housing
- Panel mount cap housing
- PC Board-mount tab header
- Double Lock Plate

Note: All dimensions shown are metric.

Note: All part numbers are RoHS Compliant.

Catalog 82181
Revised 4-08

https://cwindustrial.co.za/

Dimensions are in inches and millimeters unless otherwise specified. Values in brackets are metric equivalents.

Dimensions are shown for reference purposes only. Specifications subject to change.

USA: 1-800-522-6752
Canada: 1-905-470-4425
Mexico: 01-800-733-8926
C. America: 52-55-1106-0803

South America: 55-11-2103-6000
Hong Kong: 852-2735-1628
Japan: 81-44-844-8013
UK: 44-8706-080-208

High Density Catalog.pdf 1 05/04/2022 14:41:09

Power Double Lock (PDL) Connectors (Wire-to-Board and Wire-to-Wire) (Continued)

3.96 mm Centerline Free-Hanging Plug Housing

1 Circuit

Wire-to-Wire

Material—UL94V-0, 6/6 Nylon

Part Number
316768-1 (Natural)
316768-2 (Red)
316768-4 (Yellow)
316768-6 (Blue)
316768-9 (Black)

Related Product Data
Receptacle Contacts—page 61
Mating Cap Housings
(Free-Hanging)—pages 65-66
Double Lock Plate—page 71

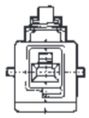

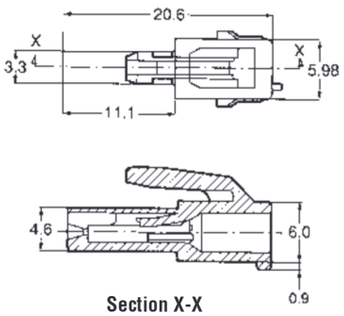

Section X-X

2 Circuits

Wire-to-Board and Wire-to-Wire

Material—UL94V-0, 6/6 Nylon

Part Number
177898-1 (Natural)
177898-2 (Red)
177898-4 (Yellow)
177898-6 (Blue)
177898-9 (Black)

Lock Type II—3-177898-1 (Natural)

Related Product Data
Receptacle Contacts—page 61
Mating Cap Housings
(Free-Hanging)—pages 65-66
(Panel Mount)—pages 67-70
Double Lock Plate—page 71
Mating Tab Headers—
pages 72-74

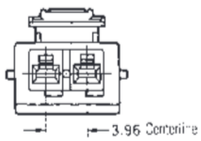

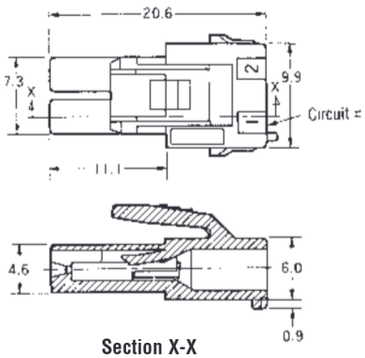

Section X-X

3 Circuits

Wire-to-Board and Wire-to-Wire

Material—UL94V-0, 6/6 Nylon

Part Number
177899-1 (Natural)
177899-2 (Red)
177899-4 (Yellow)
177899-6 (Blue)
177899-9 (Black)

Lock Type II—3-177899-1 (Natural)

Related Product Data
Receptacle Contacts—page 61
Mating Cap Housings
(Free-Hanging)—pages 65-66
(Panel Mount)—pages 67-70
Double Lock Plate—page 71
Mating Tab Headers—
pages 72-74 and
(2 circuit, 7.92 mm
centerline)—page 74

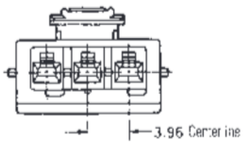

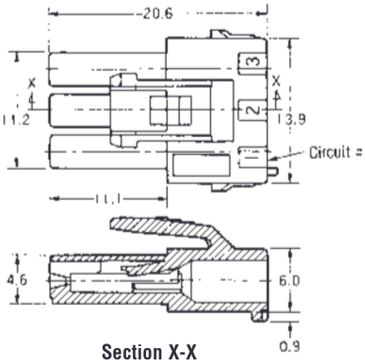

Section X-X

4 Circuits (1 Row)

Wire-to-Wire

Material—UL94V-0, 6/6 Nylon

Part Number
316501-1 (Natural)
316501-4 (Yellow)
316501-6 (Blue)

Lock Type II—3-316501-1 (Natural)

Related Product Data
Receptacle Contacts—page 61
Mating Cap Housings
(Panel Mount)—pages 67-70
Double Lock Plate—page 71

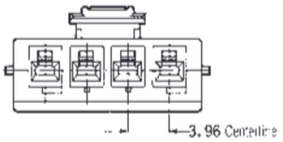

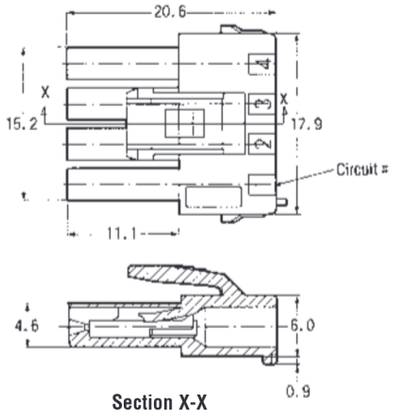

Section X-X

Note: All dimensions shown are metric.

Note: All part numbers are RoHS Compliant.

Catalog 82181
Revised 4-08

https://cwindustrial.co.za/

Dimensions are in inches and millimeters unless otherwise specified. Values in brackets are metric equivalents.

Dimensions are shown for reference purposes only. Specifications subject to change.

USA: 1-800-522-6752
Canada: 1-905-470-4425
Mexico: 01-800-733-8926
C. America: 52-55-1106-0803

South America: 55-11-2103-6000
Hong Kong: 852-2735-1628
Japan: 81-44-844-8013
UK: 44-8706-080-208

High Density Catalog.pdf 1 05/04/2022 14:41:27

Power Double Lock (PDL) Connectors (Wire-to-Board and Wire-to-Wire) (Continued)

3.96 mm Centerline Free-Hanging Plug Housing

4 Circuits (2 Rows)

Wire-to-Board and Wire-to-Wire

Material
UL94V-0, 6/6 Nylon

Part Number
177900-1 (Natural)
177900-4 (Yellow)
177900-6 (Blue)

Lock Type II
3-177900-1 (Natural)

Related Product Data
Receptacle Contacts—page 61
Mating Cap Housings
(Free-Hanging)—pages 65-66
(Panel Mount)—pages 67-70
Double Lock Plate—page 71
Mating Tab Headers—pages 72-74

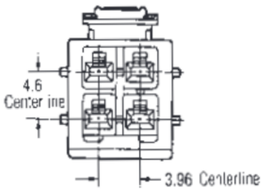

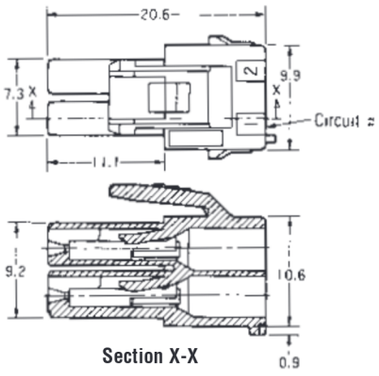

6 Circuits

Wire-to-Board and Wire-to-Wire

Material
UL94V-0, 6/6 Nylon

Part Number
177901-1 (Natural)
177901-4 (Yellow)
177901-6 (Blue)

Lock Type II
3-177901-1 (Natural)

Related Product Data
Receptacle Contacts—page 61
Mating Cap Housings
(Free-Hanging)—pages 65-66
(Panel Mount)—pages 67-70
Double Lock Plate—page 71
Mating Tab Headers—pages 72-74

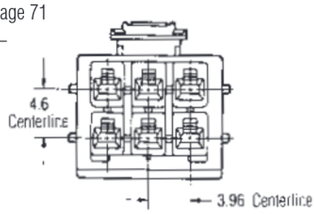

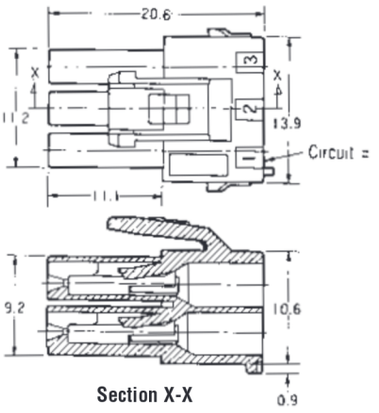

8 Circuits

Wire-to-Board and Wire-to-Wire

Material
UL94V-0, 6/6 Nylon

Part Number
177902-1 (Natural)
177902-4 (Yellow)
177902-6 (Blue)

Lock Type II
3-177902-1 (Natural)

Related Product Data
Receptacle Contacts—page 61
Mating Cap Housings
(Free-Hanging)—pages 65-66
Double Lock Plate—page 71
Mating Tab Headers—pages 72-74

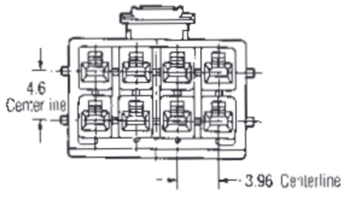

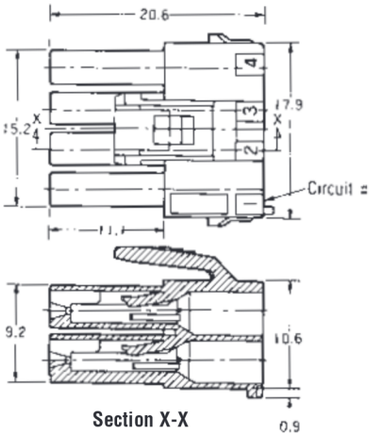

Note: All dimensions shown are metric.
Note: All part numbers are RoHS Compliant.

Catalog 82181
Revised 4-08
https://cwindustrial.co.za/

Dimensions are in inches and millimeters unless otherwise specified. Values in brackets are metric equivalents.

Dimensions are shown for reference purposes only. Specifications subject to change.

USA: 1-800-522-6752
Canada: 1-905-470-4425
Mexico: 01-800-733-8926
C. America: 52-55-1106-0803
South America: 55-11-2103-6000
Hong Kong: 852-2735-1628
Japan: 81-44-844-8013
UK: 44-8706-080-208

High Density Catalog.pdf 1 05/04/2022 14:41:45

Power Double Lock (PDL) Connectors (Wire-to-Board and Wire-to-Wire) (Continued)

3.96 mm Centerline Free-Hanging Plug Housing

9 Circuits
Wire-to-Wire

Material
UL94V-0, 6/6 Nylon

Part Number
177903-1 (Natural)
177903-4 (Yellow)
177903-6 (Blue)

Lock Type II
3-177903-1 (Natural)

Related Product Data
Receptacle Contacts—page 61
Mating Cap Housings
(Panel Mount)—pages 67-70
Double Lock Plate—page 71

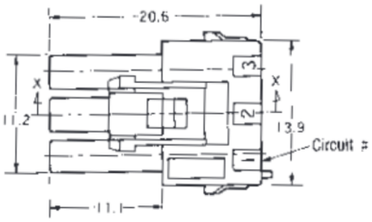

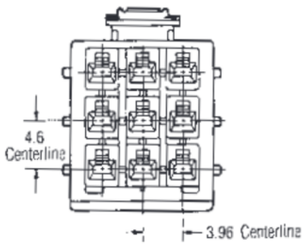

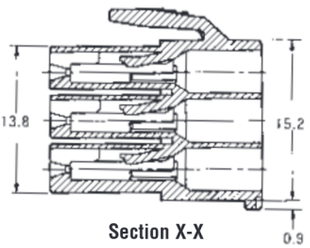

10 Circuits
Wire-to-Wire

Material
UL94V-0, 6/6 Nylon

Part Number
177904-1 (Natural)
177904-4 (Yellow)
177904-6 (Blue)

Related Product Data
Receptacle Contacts—page 61
Mating Cap Housings
(Panel Mount)—pages 67-70
Double Lock Plate—page 71

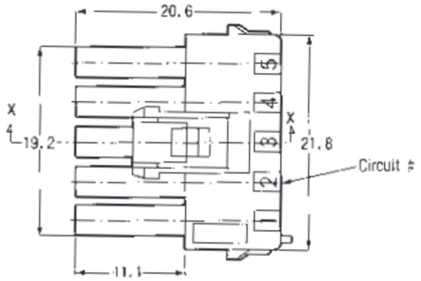

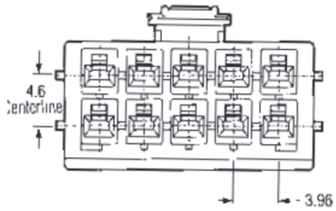

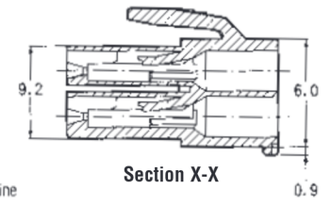

12 Circuits
Wire-to-Board and Wire-to-Wire

Material
UL94V-0, 6/6 Nylon

Part Number
177905-1 (Natural)
177905-4 (Yellow)
177905-6 (Blue)

Related Product Data
Receptacle Contacts—page 61
Mating Cap Housings
(Panel Mount)—pages 67-70
Double Lock Plate—page 71
Mating Tab Headers—pages 72-74

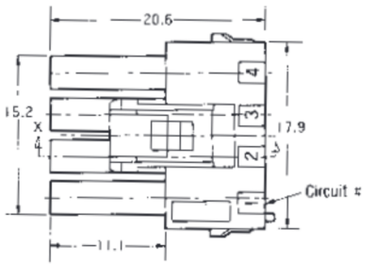

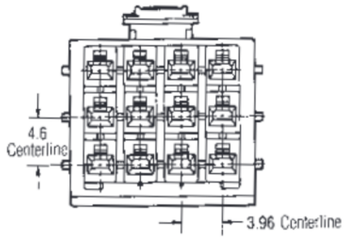

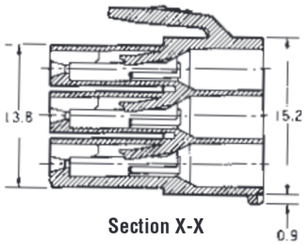

Note: All dimensions shown are metric.
Note: All part numbers are RoHS Compliant.

Catalog 82181
Revised 4-08

https://cwindustrial.co.za/

Dimensions are in inches and millimeters unless otherwise specified. Values in brackets are metric equivalents.

Dimensions are shown for reference purposes only. Specifications subject to change.

USA: 1-800-522-6752
Canada: 1-905-470-4425
Mexico: 01-800-733-8926
C. America: 52-55-1106-0803

South America: 55-11-2103-6000
Hong Kong: 852-2735-1628
Japan: 81-44-844-8013
UK: 44-8706-080-208

High Density Catalog.pdf 1 05/04/2022 14:42:07

Power Double Lock (PDL) Connectors (Wire-to-Wire)

3.96 mm Centerline Free-Hanging Cap Housing

1 Circuit

Wire-to-Wire

Material
UL94V-0, 6/6 Nylon

Part Number
316769-1 (Natural)
316769-2 (Red)
316769-4 (Yellow)
316769-6 (Blue)
316769-9 (Black)

Related Product Data
Tab Contacts—page 61
Mating Plug Housings
(Free-Hanging)—pages 62-64
Double Lock Plate—page 71

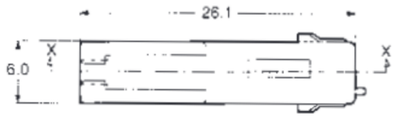

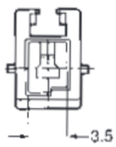

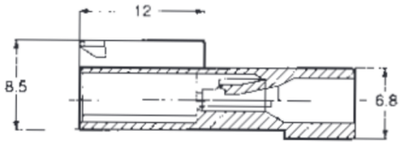

Section X-X

2 Circuits

Wire-to-Wire

Material
UL94V-0, 6/6 Nylon

Part Number
179463-1 (Natural)
179463-2 (Red)
179463-4 (Yellow)
179463-6 (Blue)
179463-9 (Black)

Related Product Data
Tab Contacts—page 61
Mating Plug Housings
(Free-Hanging)—pages 62-64
Double Lock Plate—page 71

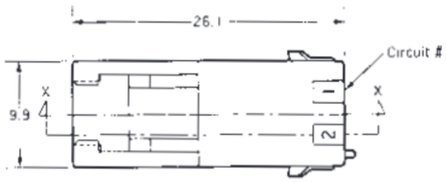

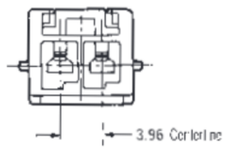

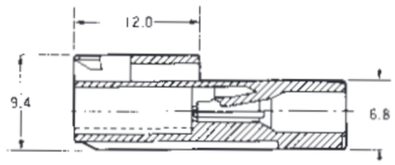

Section X-X

3 Circuits

Wire-to-Wire

Material
UL94V-0, 6/6 Nylon

Part Number
179464-1 (Natural)
179464-2 (Red)
179464-4 (Yellow)
179464-6 (Blue)
179464-9 (Black)

Related Product Data
Tab Contacts—page 61
Mating Plug Housings
(Free-Hanging)—pages 62-64
Double Lock Plate—page 71

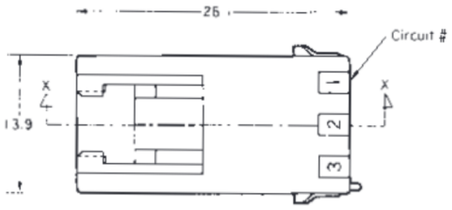

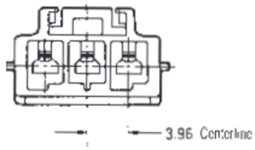

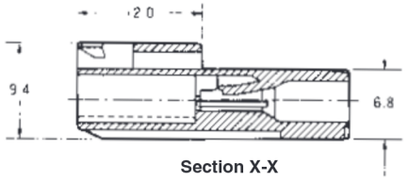

Section X-X

Note: All dimensions shown are metric.
Note: All part numbers are RoHS Compliant.

Catalog 82181
Revised 4-08

https://cwindustrial.co.za/

Dimensions are in inches and millimeters unless otherwise specified. Values in brackets are metric equivalents.

Dimensions are shown for reference purposes only. Specifications subject to change.

USA: 1-800-522-6752
Canada: 1-905-470-4425
Mexico: 01-800-733-8926
C. America: 52-55-1106-0803

South America: 55-11-2103-6000
Hong Kong: 852-2735-1628
Japan: 81-44-844-8013
UK: 44-8706-080-208

High Density Catalog.pdf 1 05/04/2022 14:42:31

Power Double Lock (PDL) Connectors (Wire-to-Wire) (Continued)

3.96 mm Centerline Free-Hanging Cap Housing

4 Circuits (2 Rows)

Wire-to-Wire

Material
UL94V-0, 6/6 Nylon

Part Number
179465-1 (Natural)
179465-4 (Yellow)
179465-6 (Blue)

Related Product Data
Tab Contacts—page 61
Mating Plug Housings
(Free-Hanging)—pages 62-64
Double Lock Plate—page 71

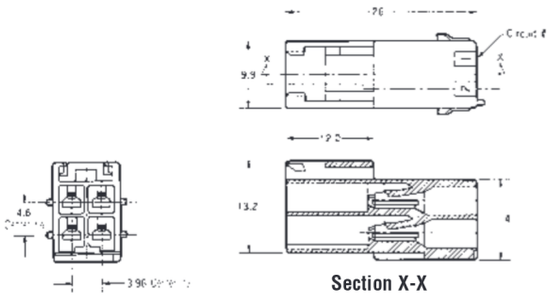

6 Circuits

Wire-to-Wire

Material
UL94V-0, 6/6 Nylon

Part Number
179466-1 (Natural)
179466-4 (Yellow)
179466-6 (Blue)

Related Product Data
Tab Contacts—page 61
Mating Plug Housings
(Free-Hanging)—pages 62-64
Double Lock Plate—page 71

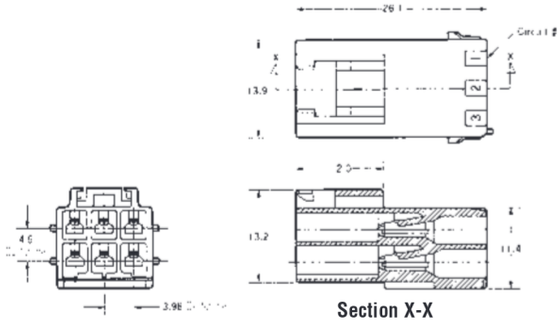

8 Circuits

Wire-to-Wire

Material
UL94V-0, 6/6 Nylon

Part Number
179467-1 (Natural)
179467-4 (Yellow)
179467-6 (Blue)

Related Product Data
Tab Contacts—page 61
Mating Plug Housings
(Free-Hanging)—pages 62-64
Double Lock Plate—page 71

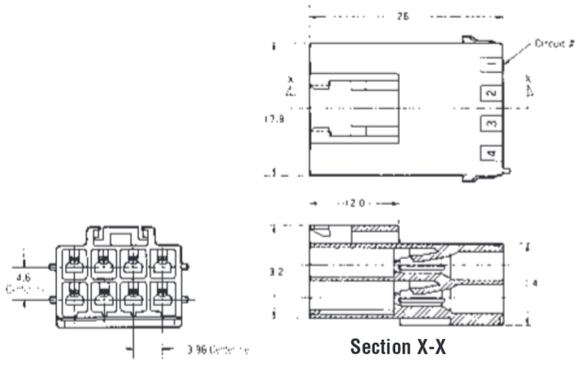

12 Circuits

Wire-to-Board

Material
UL94V-0, 6/6 Nylon

Part Number
1903720-1 (Natural)

Related Product Data
Tab Contacts—page 61
Mating Plug Housings
(Free-Hanging)—pages 62-64
Double Lock Plate—page 71

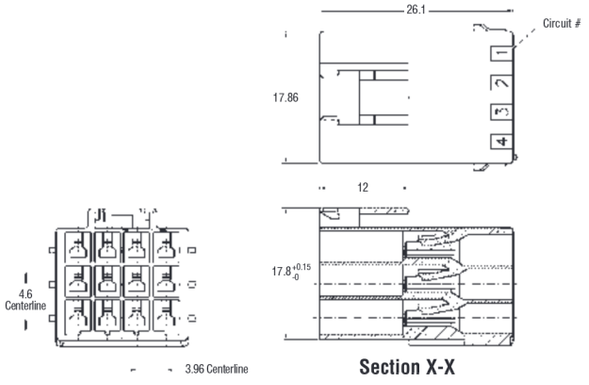

Note: All dimensions shown are metric.
Note: All part numbers are RoHS Compliant.

Catalog 82181
Revised 4-08

https://cwindustrial.co.za/

Dimensions are in inches and millimeters unless otherwise specified. Values in brackets are metric equivalents.

Dimensions are shown for reference purposes only. Specifications subject to change.

USA: 1-800-522-6752
Canada: 1-905-470-4425
Mexico: 01-800-733-8926
C. America: 52-55-1106-0803

South America: 55-11-2103-6000
Hong Kong: 852-2735-1628
Japan: 81-44-844-8013
UK: 44-8706-080-208

High Density Catalog.pdf 1 05/04/2022 14:42:50

Power Double Lock (PDL) Connectors (Wire-to-Wire) (Continued)

3.96 mm Centerline Panel Mount Cap Housing

2 Circuits
Wire-to-Wire

Material—UL94V-0, 6/6 Nylon

Part Number
177906-1 (Natural)
177906-2 (Red)
177906-4 (Yellow)
177906-6 (Blue)
177906-9 (Black)

Related Product Data
Tab Contacts—page 61
Mating Plug Housings
(Free-Hanging)—pages 62-64
Double Lock Plate—page 71

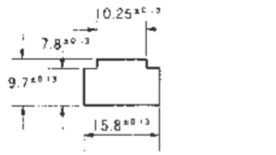

Panel Cutout
(Applicable Board Thickness: 0.8~2.0 mm)

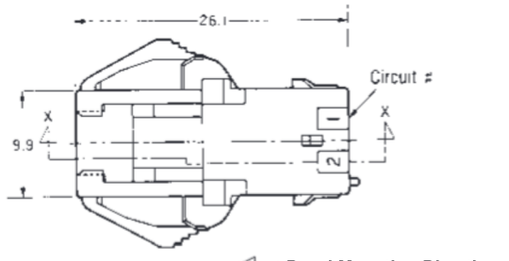

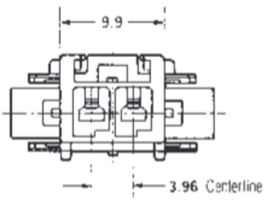

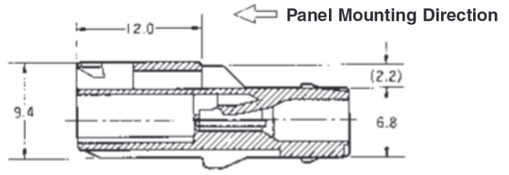

Section X-X

3 Circuits
Wire-to-Wire

Material—UL94V-0, 6/6 Nylon

Part Number
177907-1 (Natural)
177907-2 (Red)
177907-4 (Yellow)
177907-6 (Blue)
177907-9 (Black)

Related Product Data
Tab Contacts—page 61
Mating Plug Housings
(Free-Hanging)—pages 62-64
Double Lock Plate—page 71

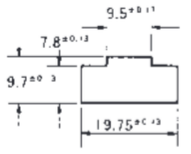

Panel Cutout
(Applicable Board Thickness: 0.8~2.0 mm)

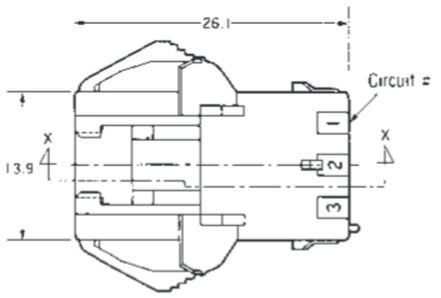

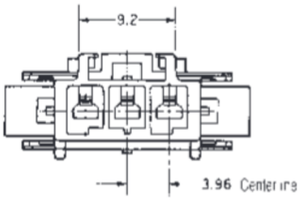

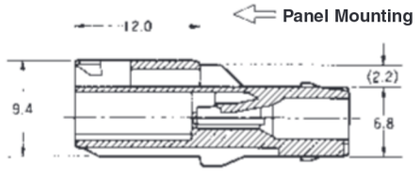

Section X-X

4 Circuits (1 Row)
Wire-to-Wire

Material—UL94V-0, 6/6 Nylon

Part Number
316502-1 (Natural)
316502-4 (Yellow)
316502-6 (Blue)

Related Product Data
Tab Contacts—page 61
Mating Plug Housings
(Free-Hanging)—pages 62-64
Double Lock Plate—page 71

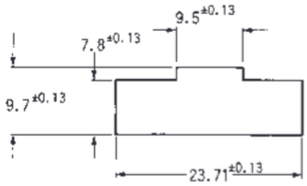

Panel Cutout
(Applicable Board Thickness: 0.8~2.0 mm)

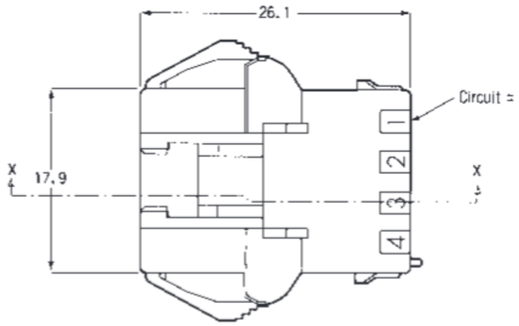

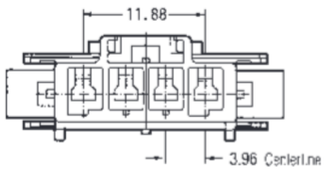

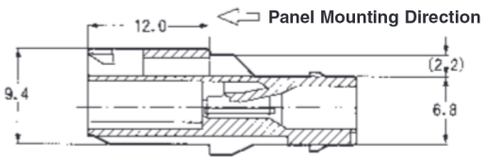

Section X-X

Note: All dimensions shown are metric.
Note: All part numbers are RoHS Compliant.

Catalog 82181
Revised 4-08

https://cwindustrial.co.za/

Dimensions are in inches and millimeters unless otherwise specified. Values in brackets are metric equivalents.

Dimensions are shown for reference purposes only. Specifications subject to change.

USA: 1-800-522-6752
Canada: 1-905-470-4425
Mexico: 01-800-733-8926
C. America: 52-55-1106-0803

South America: 55-11-2103-6000
Hong Kong: 852-2735-1628
Japan: 81-44-844-8013
UK: 44-8706-080-208

High Density Catalog.pdf 1 05/04/2022 14:43:05

Power Double Lock (PDL) Connectors (Wire-to-Wire) (Continued)

3.96 mm Centerline Panel Mount Cap Housing

4 Circuits (2 Rows)

Wire-to-Wire

Material
UL94V-0, 6/6 Nylon

Part Number
177908-1 (Natural)
177908-4 (Yellow)
177908-6 (Blue)

Related Product Data
Tab Contacts—page 61
Mating Plug Housings
(Free-Hanging)—pages 62-64
Double Lock Plate—page 71

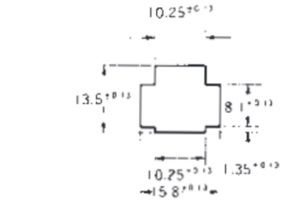

Panel Cutout
(Applicable Board Thickness: 0.8~2.0 mm)

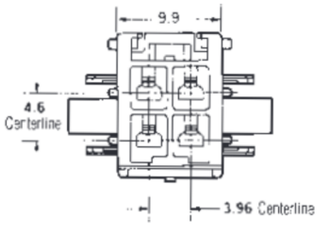

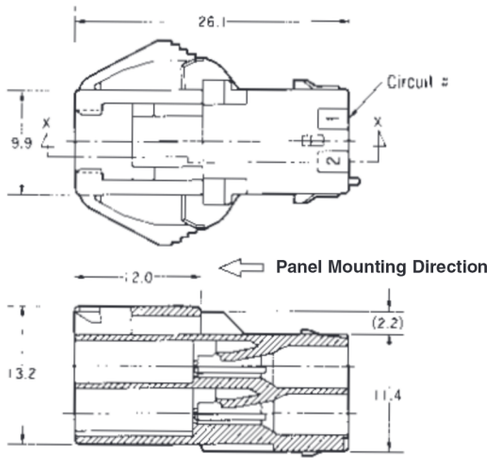

Section X-X

6 Circuits

Wire-to-Wire

Material
UL94V-0, 6/6 Nylon

Part Number
177909-1 (Natural)
177909-4 (Yellow)
177909-6 (Blue)

Related Product Data
Tab Contacts—page 61
Mating Plug Housings
(Free-Hanging)—pages 62-64
Double Lock Plate—page 71

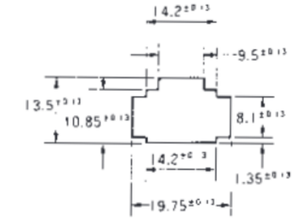

Panel Cutout
(Applicable Board Thickness: 0.8~2.0 mm)

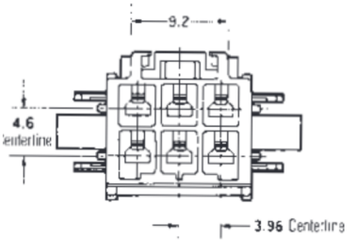

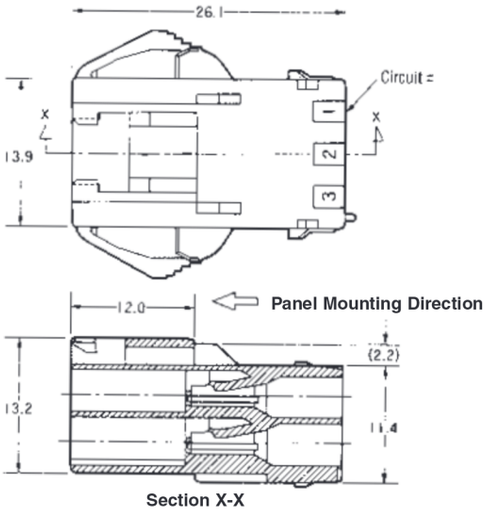

Section X-X

Note: All dimensions shown are metric.
Note: All part numbers are RoHS Compliant.

Catalog 82181
Revised 4-08

https://cwindustrial.co.za/

Dimensions are in inches and millimeters unless otherwise specified. Values in brackets are metric equivalents.

Dimensions are shown for reference purposes only. Specifications subject to change.

USA: 1-800-522-6752
Canada: 1-905-470-4425
Mexico: 01-800-733-8926
C. America: 52-55-1106-0803

South America: 55-11-2103-6000
Hong Kong: 852-2735-1628
Japan: 81-44-844-8013
UK: 44-8706-080-208

High Density Catalog.pdf 1 05/04/2022 14:43:24

Power Double Lock (PDL) Connectors (Wire-to-Wire) (Continued)

3.96 mm Centerline Panel Mount Cap Housing

9 Circuits

Wire-to-Wire

Material
UL94V-0, 6/6 Nylon

Part Number
177911-1 (Natural)
177911-4 (Yellow)
177911-6 (Blue)

Related Product Data
Tab Contacts—page 61
Mating Plug Housings
(Free-Hanging)—pages 62-64
Double Lock Plate—page 71

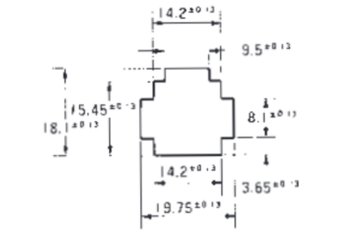

Panel Cutout
(Applicable Board Thickness: 0.8~2.0 mm)

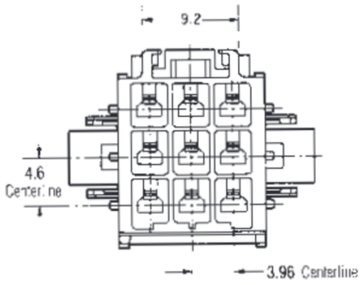

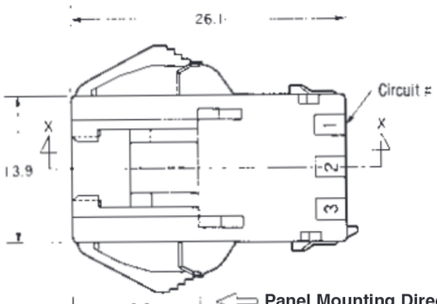

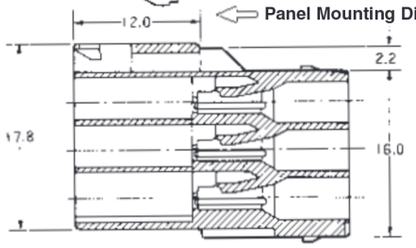

Section X-X

For 10 Circuits

Wire-to-Wire

Material
UL94V-0, 6/6 Nylon

Part Number
177912-1 (Natural)
177912-4 (Yellow)
177912-6 (Blue)

Related Product Data
Tab Contacts—page 61
Mating Plug Housings
(Free-Hanging)—pages 62-64
Double Lock Plate—page 71

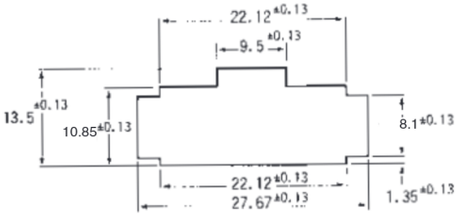

Panel Cutout
(Applicable Board Thickness: 0.8~2.0 mm)

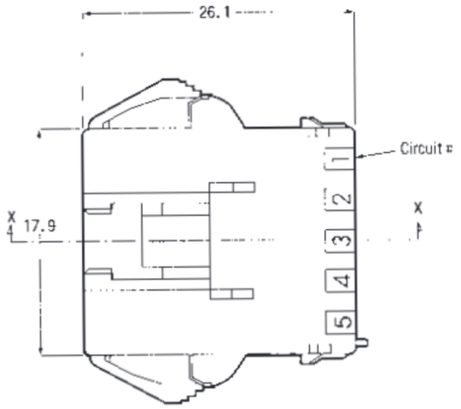

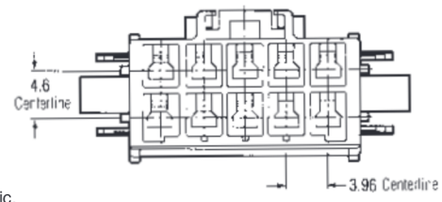

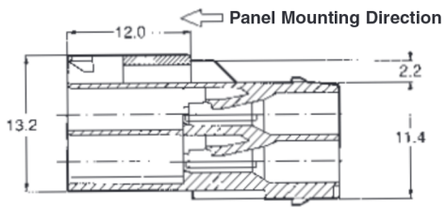

Section X-X

Note: All dimensions shown are metric.
Note: All part numbers are RoHS Compliant.

Catalog 82181
Revised 4-08

https://cwindustrial.co.za/

Dimensions are in inches and millimeters unless otherwise specified. Values in brackets are metric equivalents.

Dimensions are shown for reference purposes only. Specifications subject to change.

USA: 1-800-522-6752
Canada: 1-905-470-4425
Mexico: 01-800-733-8926
C. America: 52-55-1106-0803

South America: 55-11-2103-6000
Hong Kong: 852-2735-1628
Japan: 81-44-844-8013
UK: 44-8706-080-208

High Density Catalog.pdf 1 05/04/2022 14:43:45

Power Double Lock (PDL) Connectors (Wire-to-Wire) (Continued)

3.96 mm Centerline Panel Mount Cap Housing

12 Circuits
Wire-to-Wire

Material
UL94V-0, 6/6 Nylon

Part Number
177913-1 (Natural)
177913-4 (Yellow)
177913-6 (Blue)

Related Product Data
Tab Contacts—page 61
Mating Plug Housings
(Free-Hanging)—pages 62-64
Double Lock Plate—page 71

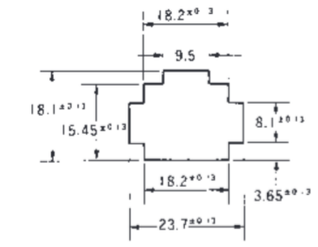

Panel Cutout
(Applicable Board Thickness: 0.8~2.0 mm)

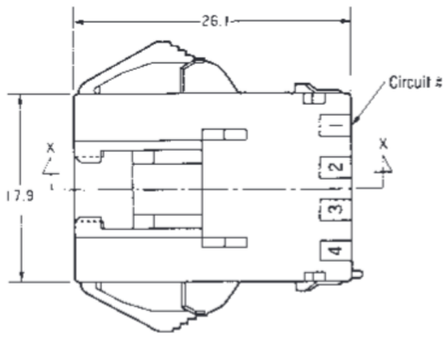

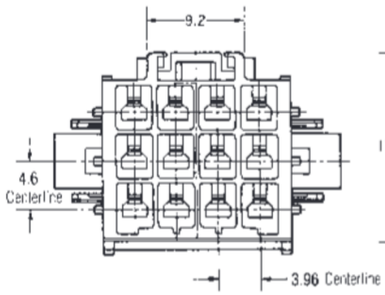

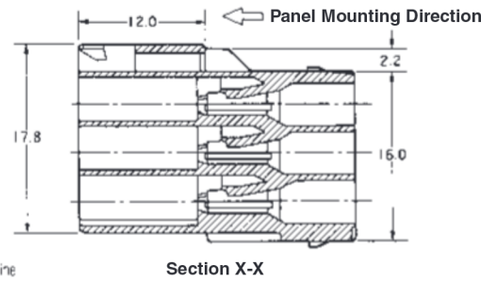

Section X-X

Note: All dimensions shown are metric.
Note: All part numbers are RoHS Compliant.

High Density Catalog.pdf 1 05/04/2022 14:44:38

Power Double Lock (PDL) Connectors (Wire-to-Board and Wire-to-Wire)

3.96 mm Centerline Double-Lock Plates

Double Lock Plates

Material
UL94V-0, glass filled 6/6 Nylon, natural color

Part Number
316770-1 (1 Pos.)
177918-1 (2 Pos.)
177919-1 (3 Pos.)
177920-1 (4 Pos.)
177921-1 (5 Pos.)

Related Product Data
Plug Housings—pages 62-64
Cap Housings —pages 65-70

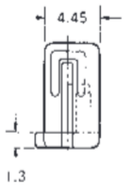

For 1 Circuit

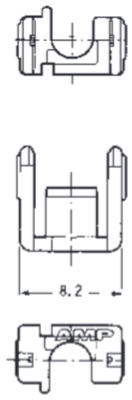

For 2 Circuits

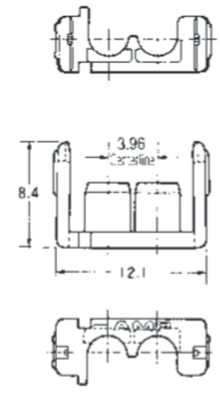

For 3 Circuits

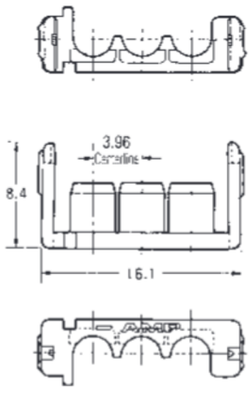

For 4 Circuits

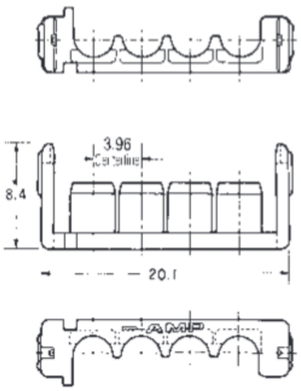

For 5 Circuits

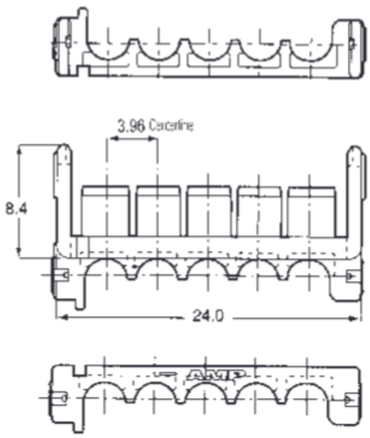

No. of Pos.	Applicable Housing Part No.			Double Lock Plate	
	Plug Housing	Cap Housing		Part Number	Required Qty.
		Free-Hanging	Panel Mount		
1	316768-☐	316769-☐	——	316770-1 (1 Pos.)	1
2	177898-☐	179463-☐	177906-☐	177918-1 (2 Pos.)	1
3	177899-☐	179464-☐	177907-☐	177919-1 (3 Pos.)	1
4 (1 Row)	316501-☐	——	316502-☐	177920-1 (4 Pos.)	1
4 (2 Rows)	177900-☐	179465-☐	177908-☐	177918-1 (2 Pos.)	2
6	177901-☐	179466-☐	177909-☐	177919-1 (3 Pos.)	2
8	177902-☐	179467-☐	——	177920-1 (4 Pos.)	2
9	177903-☐	——	177911-☐	177919-1 (3 Pos.)	3
10	177904-☐	——	177912-☐	177921-1 (5 Pos.)	2
12	177905-☐	——	177913-☐	177920-1 (4 Pos.)	3

Note: All dimensions shown are metric.
Note: All part numbers are RoHS Compliant.

Catalog 82181
Revised 4-08
https://cwindustrial.co.za/

Dimensions are in inches and millimeters unless otherwise specified. Values in brackets are metric equivalents.

Dimensions are shown for reference purposes only. Specifications subject to change.

USA: 1-800-522-6752
Canada: 1-905-470-4425
Mexico: 01-800-733-8926
C. America: 52-55-1106-0803
South America: 55-11-2103-6000
Hong Kong: 852-2735-1628
Japan: 81-44-844-8013
UK: 44-8706-080-208

High Density Catalog.pdf 1 05/04/2022 14:44:59

Power Double Lock (PDL) Connectors (Wire-to-Board)

3.96 mm Centerline for PC Board Mount Tab Header, Vertical

2 Circuits

Wire-to-Board

Material and Finish

Housing—UL 94V-0, glass filled 6/6 Nylon

Contact—Copper alloy, Tin plated

Part Number

179838-1 (Natural)
179838-2 (Red)
179838-4 (Yellow)
179838-6 (Blue)
179838-9 (Black)

Tube (53 ea.)—316299-□

Related Product Data

Mating Plug Housing

(Free-Hanging)—pages 62-64

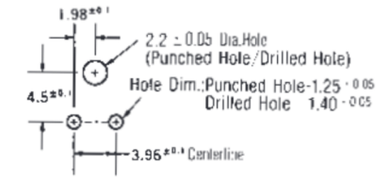

PC Board Layout
(Applicable Board Thickness: 1.6 mm)

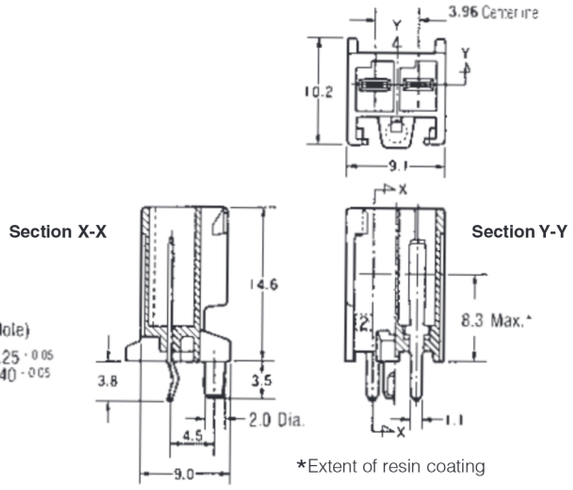

3 Circuits

Wire-to-Board

Material and Finish

Housing—UL 94V-0, glass filled 6/6 Nylon

Contact—Copper alloy, Tin plated

Part Number

179839-1 (Natural)
179839-2 (Red)
179839-4 (Yellow)
179839-6 (Blue)
179839-9 (Black)

Related Product Data

Mating Plug Housing

(Free-Hanging)—pages 62-64

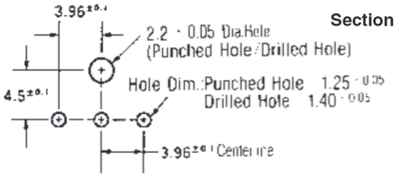

PC Board Layout
(Applicable Board Thickness: 1.6 mm)

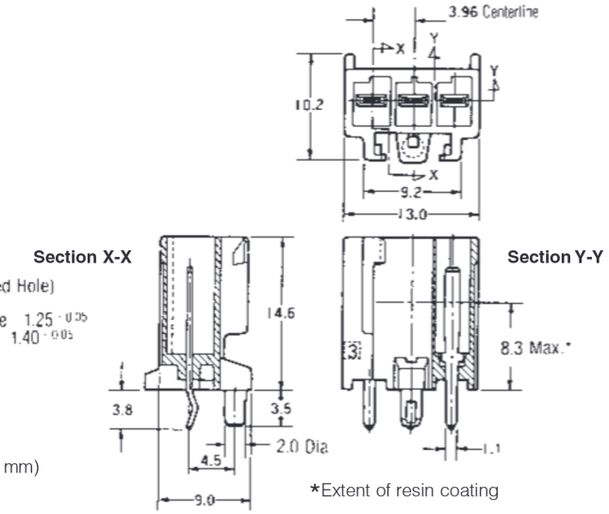

Note: All dimensions shown are metric.

Note: All part numbers are RoHS Compliant.

Catalog 82181
Revised 4-08

https://cwindustrial.co.za/

Dimensions are in inches and millimeters unless otherwise specified. Values in brackets are metric equivalents.

Dimensions are shown for reference purposes only. Specifications subject to change.

USA: 1-800-522-6752
Canada: 1-905-470-4425
Mexico: 01-800-733-8926
C. America: 52-55-1106-0803

South America: 55-11-2103-6000
Hong Kong: 852-2735-1628
Japan: 81-44-844-8013
UK: 44-8706-080-208

High Density Catalog.pdf 1 05/04/2022 14:45:22

Power Double Lock (PDL) Connectors (Wire-to-Board) (Continued)

3.96 mm Centerline for PC Board Mount Tab Header, Vertical (Continued)

4 Circuits (2 Rows)

Wire-to-Board

Material and Finish

Housing—UL 94V-0, glass filled 6/6 Nylon.

Contact—Copper alloy, Tin plated

Part Number

179840-1 (Natural)
179840-4 (Yellow)
179840-6 (Blue)

Related Product Data

Mating Plug Housings

(Free-Hanging)—pages 62-64

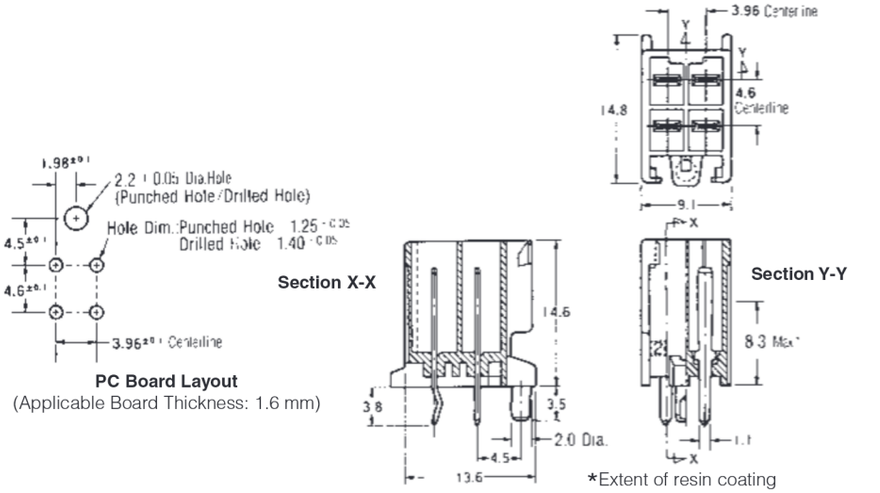

PC Board Layout
(Applicable Board Thickness: 1.6 mm)

*Extent of resin coating

6 Circuits

Wire-to-Board

Material and Finish

Housing—UL 94V-0, glass filled 6/6 Nylon.

Contact—Copper alloy, Tin plated

Part Number

179841-1 (Natural)
179841-4 (Yellow)
179841-6 (Blue)

Related Product Data

Mating Plug Housings

(Free-Hanging)—pages 62-64

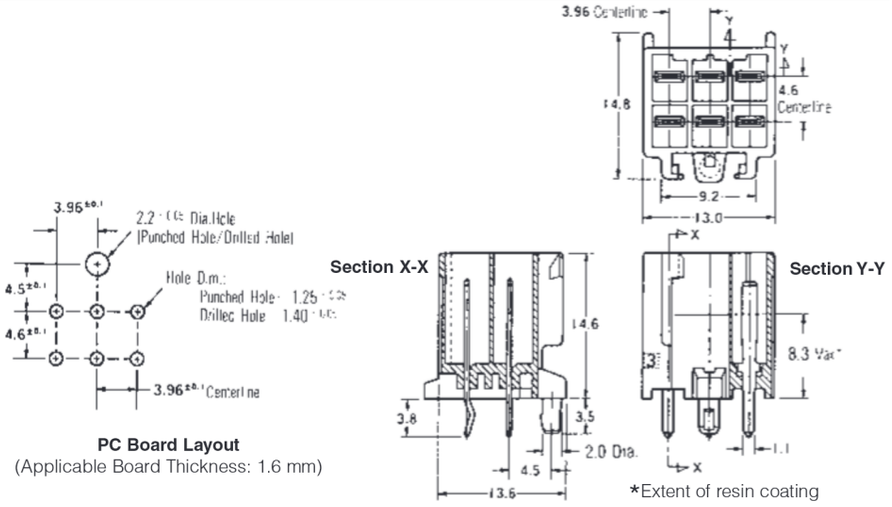

PC Board Layout
(Applicable Board Thickness: 1.6 mm)

*Extent of resin coating

8 Circuits

Wire-to-Board

Material and Finish

Housing—UL 94V-0, glass filled 6/6 Nylon.

Contact—Copper alloy, Tin plated

Part Number

917845-1 (Natural)
917845-4 (Yellow)
917845-6 (Blue)

Related Product Data

Mating Plug Housings

(Free-Hanging)—pages 62-64

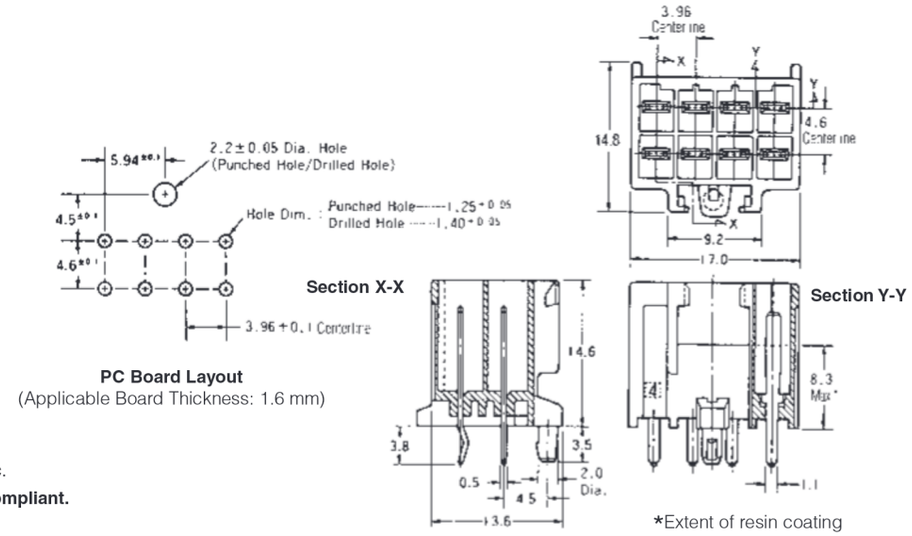

PC Board Layout
(Applicable Board Thickness: 1.6 mm)

*Extent of resin coating

Note: All dimensions shown are metric.

Note: All part numbers are RoHS Compliant.

Catalog 82181
Revised 4-08

https://cwindustrial.co.za/

Dimensions are in inches and millimeters unless otherwise specified. Values in brackets are metric equivalents.

Dimensions are shown for reference purposes only. Specifications subject to change.

USA: 1-800-522-6752
Canada: 1-905-470-4425
Mexico: 01-800-733-8926
C. America: 52-55-1106-0803

South America: 55-11-2103-6000
Hong Kong: 852-2735-1628
Japan: 81-44-844-8013
UK: 44-8706-080-208

High Density Catalog.pdf 1 05/04/2022 14:45:43

Power Double Lock (PDL) Connectors (Wire-to-Board) (Continued)

3.96 mm Centerline for PC Board Mount Tab Header, Vertical

12 Circuits
Wire-to-Board

Material and Finish
Housing—UL 94V-0, glass filled 6/6 Nylon
Contact—Copper alloy, Tin plated

Part Number
179843-1 (Natural)
179843-4 (Yellow)
179843-6 (Blue)

Related Product Data
Mating Plug Housings
(Free-Hanging)—pages 62-64

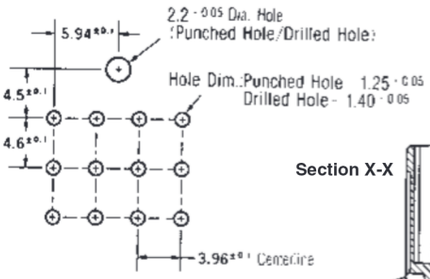

PC Board Layout
(Applicable Board Thickness: 1.6 mm)

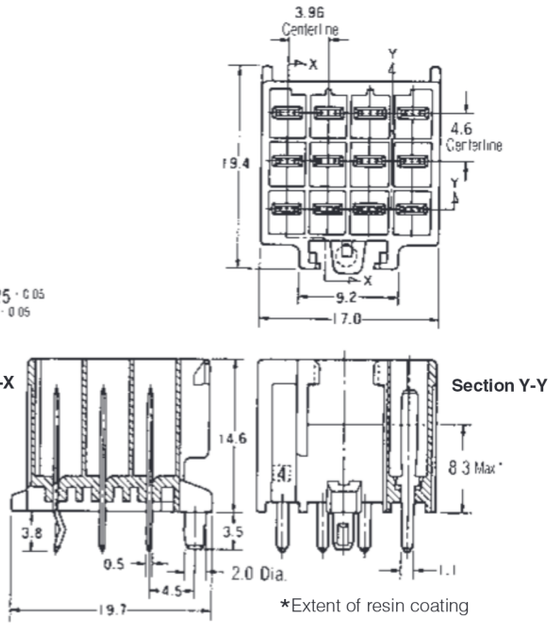

3.96 mm Centerline (2 Pos. = 7.92 mm Centerline) for PC Board Mount Tab Header, Vertical

2 Circuits
Wire-to-Board

Material and Finish
Housing—UL 94V-0, glass filled 6/6 Nylon
Contact—Copper alloy, Tin plated

Part Number
With kink
179844-1 (Natural)
179844-2 (Red)
179844-4 (Yellow)
179844-6 (Blue)
179844-9 (Black)
Without kink
9-179844-1 (Natural)
9-179844-6 (Blue)

Related Product Data
Mating 3-Circuit Plug Housings
(Free-Hanging)—page 62

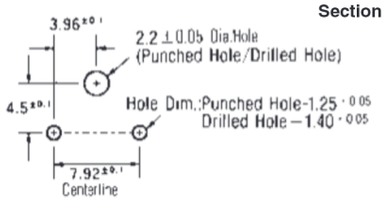

PC Board Layout
(Applicable Board Thickness: 1.6 mm)

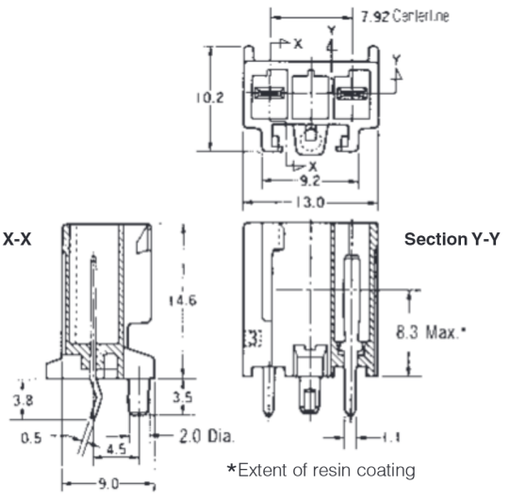

Note: All dimensions shown are metric.
Note: All part numbers are RoHS Compliant.

Catalog 82181
Revised 4-08

https://cwindustrial.co.za/

Dimensions are in inches and millimeters unless otherwise specified. Values in brackets are metric equivalents.

Dimensions are shown for reference purposes only. Specifications subject to change.

USA: 1-800-522-6752
Canada: 1-905-470-4425
Mexico: 01-800-733-8926
C. America: 52-55-1106-0803

South America: 55-11-2103-6000
Hong Kong: 852-2735-1628
Japan: 81-44-844-8013
UK: 44-8706-080-208

High Density Catalog.pdf 1 05/04/2022 14:46:02

Power Double Lock (PDL) Connectors (Wire-to-Board and Wire-to-Wire) (Continued)

6.5 mm Centerline Free-Hanging Plug Housing

2 Circuits

Wire-to-Board

Material
UL 94V-0, 6/6 Nylon

Part Number
1939344-1 (Natural)

Related Product Data
Receptacle Contacts—page 61
Double Lock Plate—page 77
Mating Tab Headers—pages 79-81

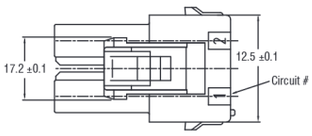

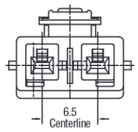

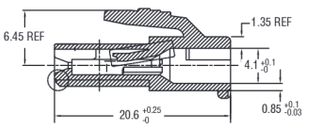

3 Circuits

Wire-to-Board

Material
UL 94V-0, 6/6 Nylon

Part Number
179938-1 (Natural)
179938-2 (Red)
179938-4 (Yellow)
179938-6 (Blue)
179938-9 (Black)

Related Product Data
Receptacle Contacts—page 61
Double Lock Plate—page 77
Mating Tab Headers—pages 79-81

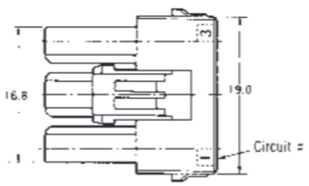

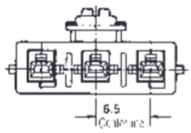

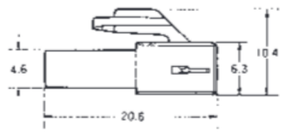

4 Circuits (1 Row)

Wire-to-Board

Material
UL 94V-0, 6/6 Nylon

Part Number
179939-1 (Natural)
179939-4 (Yellow)
179939-6 (Blue)
179939-9 (Black)

Related Product Data
Receptacle Contacts—page 61
Double Lock Plate—page 77
Mating Tab Headers—pages 79-81

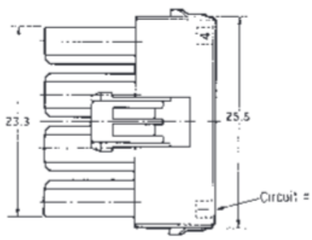

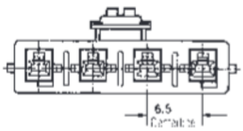

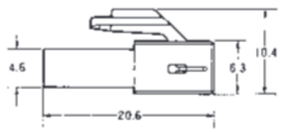

4 Circuits (2 Rows)

Wire-to-Board

Material
UL 94V-0, 6/6 Nylon

Part Number
Housing Lock Type A
179861-1 (Natural)
179861-4 (Yellow)
179861-6 (Blue)
Housing Lock Type B
2-179861-1 (Natural)
2-179861-4 (Yellow)
2-179861-6 (Blue)

Related Product Data
Receptacle Contacts—page 61
Double Lock Plate—page 77
Mating Tab Headers—pages 79-81

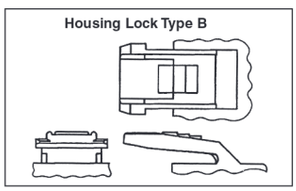

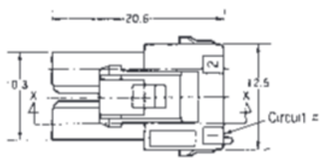

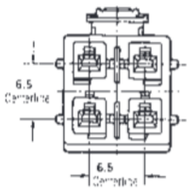

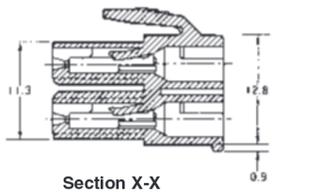

Section X-X

Note: All dimensions shown are metric.

Note: All part numbers are RoHS Compliant.

Catalog 82181
Revised 4-08

https://cwindustrial.co.za/

Dimensions are in inches and millimeters unless otherwise specified. Values in brackets are metric equivalents.

Dimensions are shown for reference purposes only. Specifications subject to change.

USA: 1-800-522-6752
Canada: 1-905-470-4425
Mexico: 01-800-733-8926
C. America: 52-55-1106-0803

South America: 55-11-2103-6000
Hong Kong: 852-2735-1628
Japan: 81-44-844-8013
UK: 44-8706-080-208

High Density Catalog.pdf 1 05/04/2022 14:46:23

Power Double Lock (PDL) Connectors (Wire-to-Board and Wire-to-Wire) (Continued)

6.5 mm Centerline Free-Hanging Plug Housing

6 Circuits

Wire-to-Board

Material
UL 94V-0, 6/6 Nylon

Part Number
Housing Lock Type A
179862-1 (Natural)
179862-4 (Yellow)
179862-6 (Blue)

Housing Lock Type B
2-179862-1 (Natural)
2-179862-4 (Yellow)
2-179862-6 (Blue)

Related Product Data
Receptacle Contacts—page 61
Double Lock Plate—page 77
Mating Tab Headers—pages 79-81

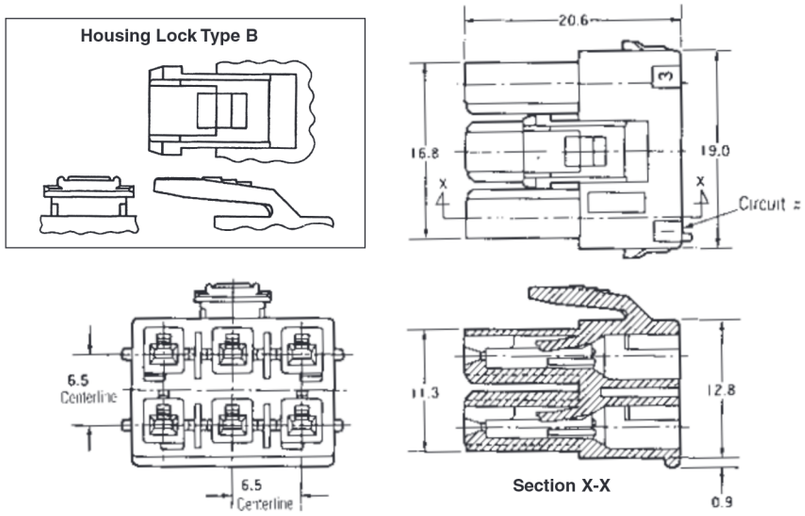

12 Circuits

Wire-to-Board

Material
UL 94V-0, 6/6 Nylon.

Part Number
Housing Lock Type A
917354-1 (Natural)
Housing Lock Type B
2-917354-1 (Natural)

Related Product Data
Receptacle Contacts—page 61
Double Lock Plate—page 77
Mating Tab Headers—pages 79-81

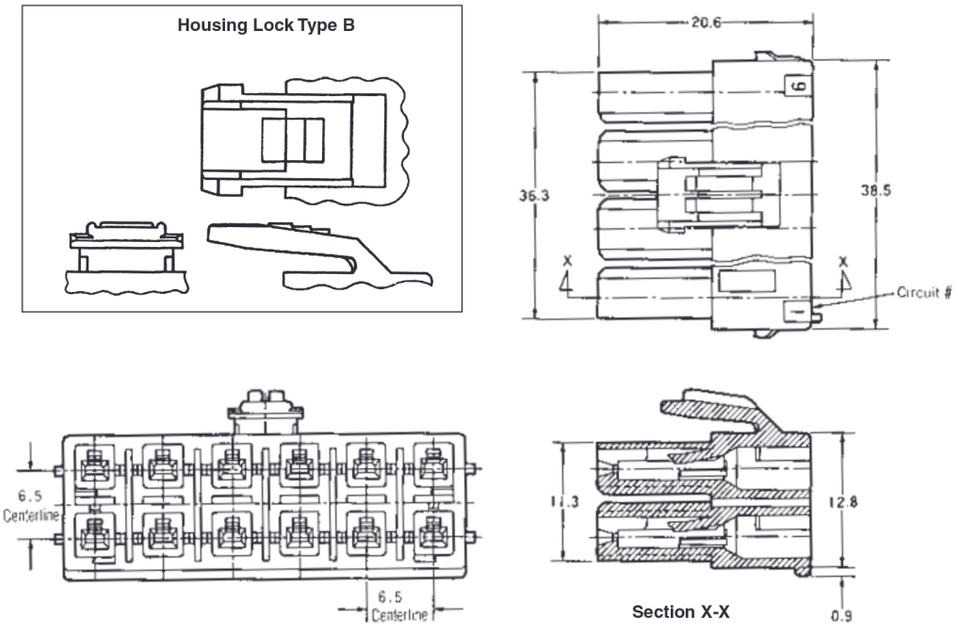

Note: All dimensions shown are metric.
Note: All part numbers are RoHS Compliant.

Catalog 82181
Revised 4-08

https://cwindustrial.co.za/

Dimensions are in inches and millimeters unless otherwise specified. Values in brackets are metric equivalents.

Dimensions are shown for reference purposes only. Specifications subject to change.

USA: 1-800-522-6752
Canada: 1-905-470-4425
Mexico: 01-800-733-8926
C. America: 52-55-1106-0803

South America: 55-11-2103-6000
Hong Kong: 852-2735-1628
Japan: 81-44-844-8013
UK: 44-8706-080-208

High Density Catalog.pdf 1 05/04/2022 14:46:42

Power Double Lock (PDL) Connectors (Wire-to-Board and Wire-to-Wire) (Continued)

6.5 mm Centerline Double-Lock Plates

Material
UL94V-0, glass filled
6/6 Nylon, natural color

Part Number
316061-1 (2-Circuits)
316062-1 (3-Circuits)
316063-1 (4-Circuits)
353891-1 (6-Circuits)

Related Product Data
Plug Housings
(Free-Hanging)—pages 75-76

For 2 Circuits
Wire-to-Board

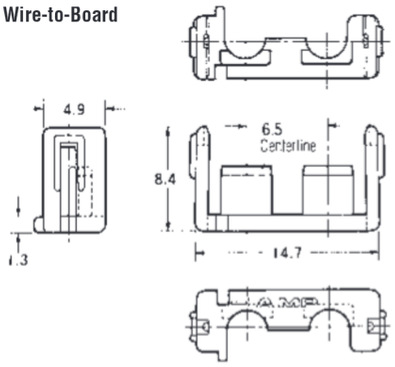

For 3 Circuits
Wire-to-Board

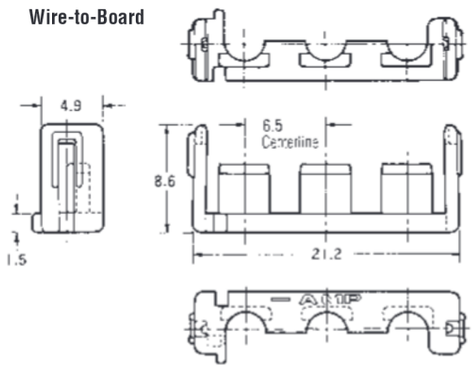

For 4 Circuits
Wire-to-Board

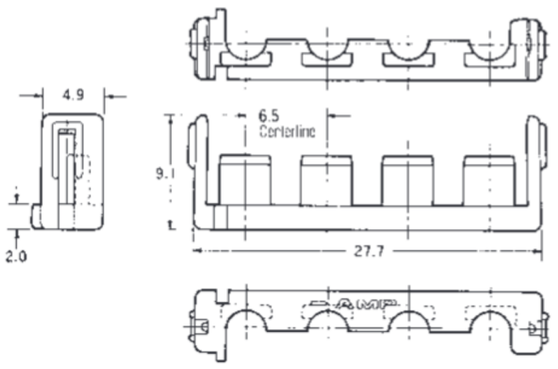

For 6 Circuits
Wire-to-Board

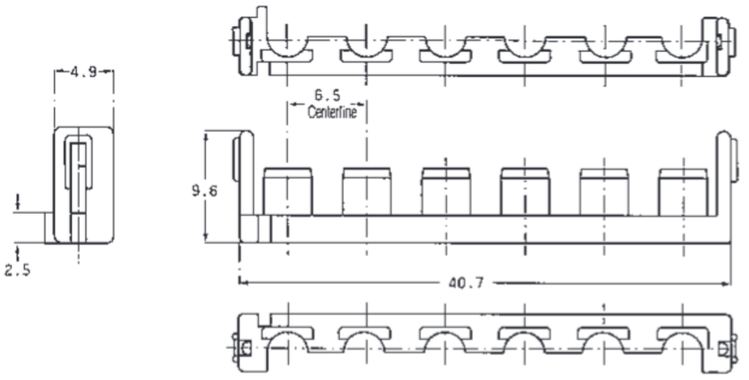

No. of Pos.	Applicable Plug Housing Part No.	Double Lock Plate	
		Part Number	Required Qty.
3	179938-☐	316062-1	1
4 (1 Row)	179939-☐	316063-1	1
4 (2 Rows)	179861-☐	316061-1	2
6	179862-☐	316062-1	2
12	917354-☐	353891-1	2

Note: All dimensions shown are metric.
Note: All part numbers are RoHS Compliant.

Catalog 82181
Revised 4-08
https://cwindustrial.co.za/

Dimensions are in inches and millimeters unless otherwise specified. Values in brackets are metric equivalents.

Dimensions are shown for reference purposes only. Specifications subject to change.

USA: 1-800-522-6752
Canada: 1-905-470-4425
Mexico: 01-800-733-8926
C. America: 52-55-1106-0803
South America: 55-11-2103-6000
Hong Kong: 852-2735-1628
Japan: 81-44-844-8013
UK: 44-8706-080-208

High Density Catalog.pdf 1 05/04/2022 14:47:01

Power Double Lock (PDL) Connectors (Wire-to-Board) (Continued)

6.5 mm Centerline Panel Mount Cap Housing

2 Circuits
Wire-to-Wire

Material and Finish
Housing—UL 94V-0, glass filled 6/6 Nylon
Contact—Copper alloy, Tin plated

Part Number
1939343-1 (Natural)

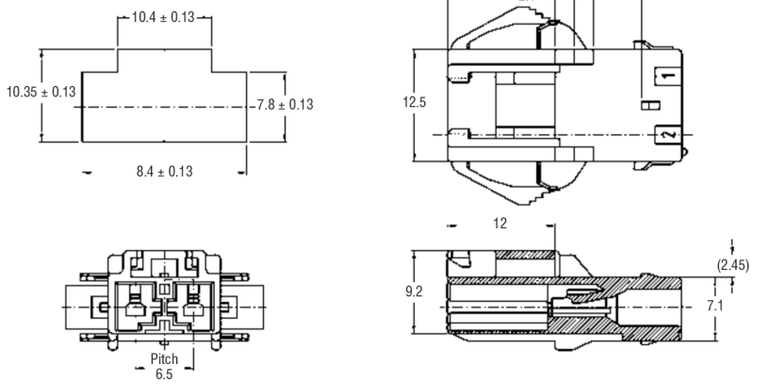

4 Circuits
Wire-to-Wire

Material and Finish
Housing—UL 94V-0, glass filled 6/6 Nylon
Contact—Copper alloy, Tin plated

Part Number
1903486-1 (Natural)

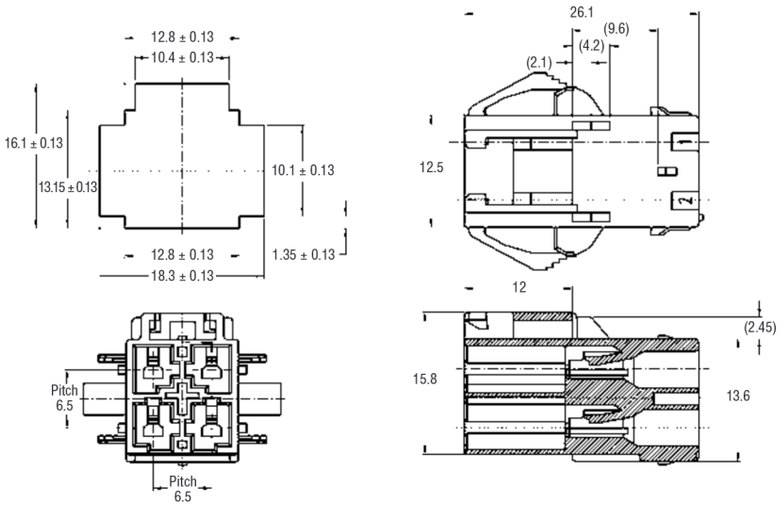

6 Circuits
Wire-to-Wire

Material and Finish
Housing—UL 94V-0, glass filled 6/6 Nylon
Contact—Copper alloy, Tin plated

Part Number
1903487-1 (Natural)

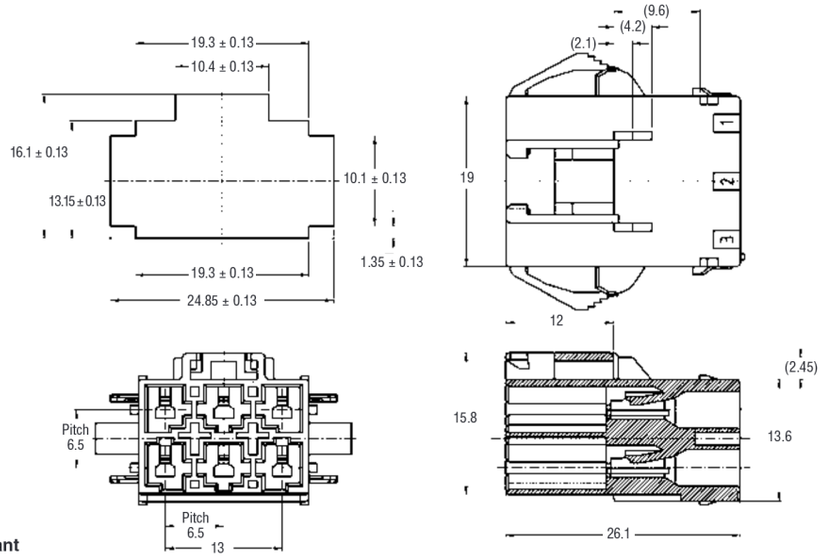

Note: All dimensions shown are metric.
Note: All part numbers are RoHS Compliant

Catalog 82181
Revised 4-08

https://cwindustrial.co.za/

Dimensions are in inches and millimeters unless otherwise specified. Values in brackets are metric equivalents.

Dimensions are shown for reference purposes only. Specifications subject to change.

USA: 1-800-522-6752
Canada: 1-905-470-4425
Mexico: 01-800-733-8926
C. America: 52-55-1106-0803

South America: 55-11-2103-6000
Hong Kong: 852-2735-1628
Japan: 81-44-844-8013
UK: 44-8706-080-208

High Density Catalog.pdf 1 05/04/2022 14:47:20

Power Double Lock (PDL) Connectors (Wire-to-Board) (Continued)

6.5 mm Centerline (2 Pos.=13 mm Centerline) PC Board Mount Tab Header, Vertical

3 Circuits
Wire-to-Board

Material and Finish
Housing—UL 94V-0, glass filled 6/6 Nylon
Contact—Copper alloy, Tin plated

Part Number
179846-1 (Natural)
179846-4 (Yellow)
179846-6 (Blue)

Related Product Data
Mating Plug Housings
(Free-Hanging)—pages 75-76

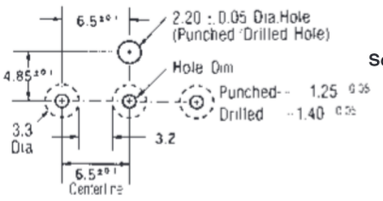

PC Board Layout
(Applicable Board Thickness: 1.6 mm)

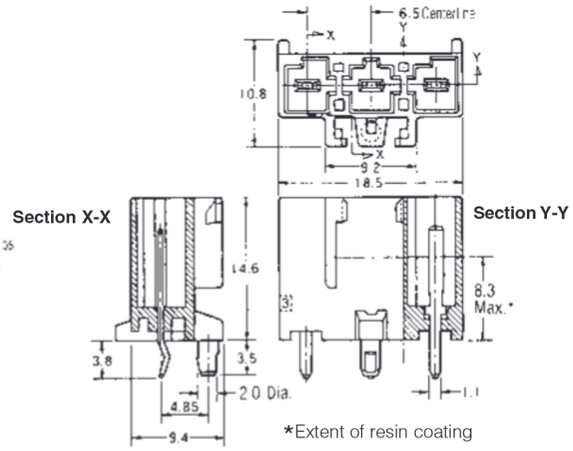

*Extent of resin coating

2 Circuits
(13 mm Centerline)
Wire-to-Board

Material and Finish
Housing—UL 94V-0, glass filled 6/6 Nylon
Contact—Copper alloy, Tin plated

Part Number
917745-1 (Natural)
917745-4 (Yellow)
917745-6 (Blue)
Tube (26 ea.)—917746-□

Related Product Data
Mating 3-Circuit Plug Housings
(Free-Hanging)—page 75

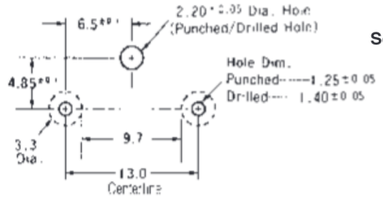

PC Board Layout
(Applicable Board Thickness: 1.6 mm)

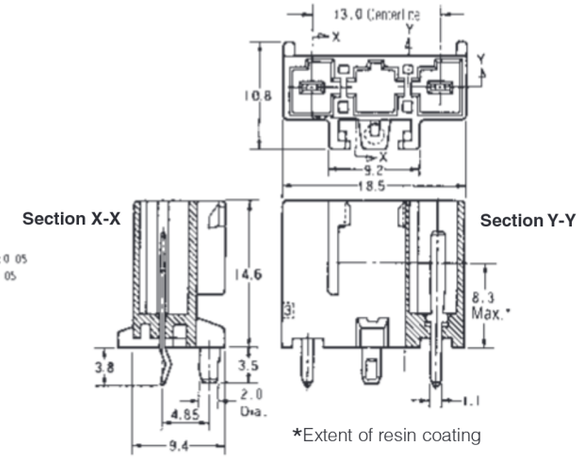

*Extent of resin coating

4 Circuits (1 Row)
Wire-to-Board

Material and Finish
Housing—UL 94V-0, glass filled 6/6 Nylon
Contact—Copper alloy, Tin plated

Part Number
179847-1 (Natural)
179847-4 (Yellow)
179847-6 (Blue)

Related Product Data
Mating Plug Housings
(Free-Hanging)—pages 75-76

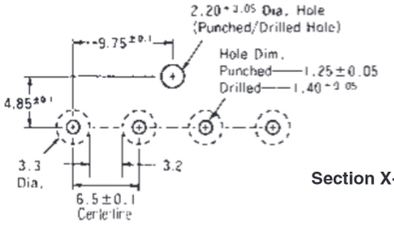

PC Board Layout
(Applicable Board Thickness: 1.6 mm)

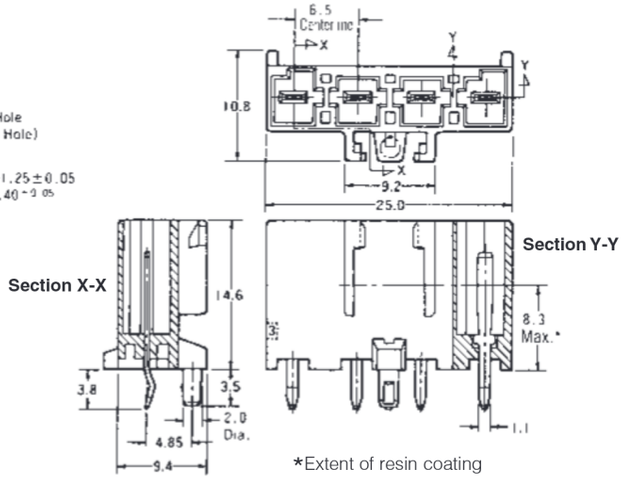

*Extent of resin coating

Note: All dimensions shown are metric.
Note: All part numbers are RoHS Compliant.

Catalog 82181
Revised 4-08
https://cwindustrial.co.za/

Dimensions are in inches and millimeters unless otherwise specified. Values in brackets are metric equivalents.

Dimensions are shown for reference purposes only. Specifications subject to change.

USA: 1-800-522-6752
Canada: 1-905-470-4425
Mexico: 01-800-733-8926
C. America: 52-55-1106-0803
South America: 55-11-2103-6000
Hong Kong: 852-2735-1628
Japan: 81-44-844-8013
UK: 44-8706-080-208

High Density Catalog.pdf 1 05/04/2022 14:47:38

Power Double Lock (PDL) Connectors (Wire-to-Board) (Continued)

6.5 mm Centerline PC Board Mount Tab Header, Vertical

4 Circuits (2 Rows)

Wire-to-Board

Material and Finish

Housing—UL 94V-0, glass filled 6/6 Nylon

Contact—Copper alloy, Tin plated

Part Number

179848-1 (Natural)
179848-4 (Yellow)
179848-6 (Blue)

Tube (40 ea.)—917747-□

Related Product Data

Mating Plug Housings

(Free-Hanging)—pages 75-76

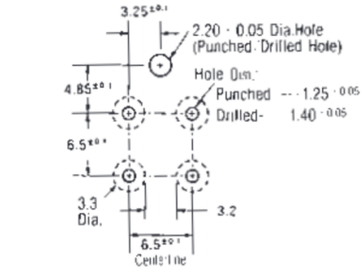

PC Board Layout
(Applicable Board Thickness: 1.6 mm)

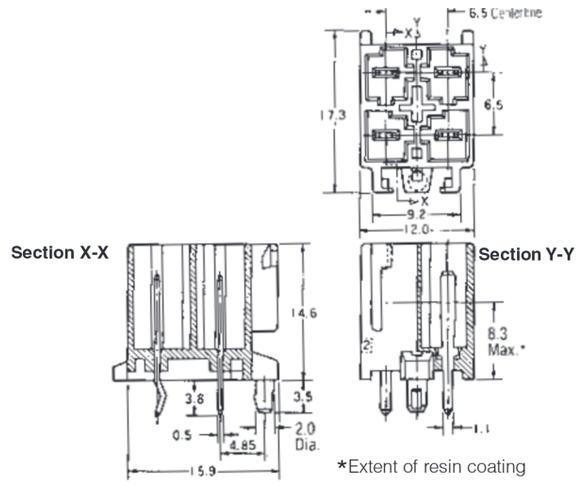

*Extent of resin coating

6 Circuits

Wire-to-Board

Material and Finish

Housing—UL 94V-0, glass filled 6/6 Nylon

Contact—Copper alloy, Tin plated

Part Number

179849-1 (Natural)
179849-4 (Yellow)
179849-6 (Blue)

Related Product Data

Mating Plug Housings

(Free-Hanging)—pages 75-76

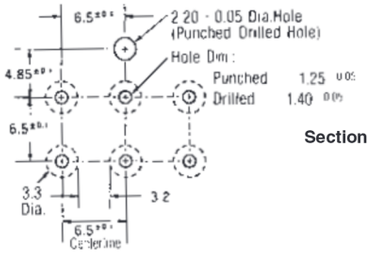

PC Board Layout
(Applicable Board Thickness: 1.6 mm)

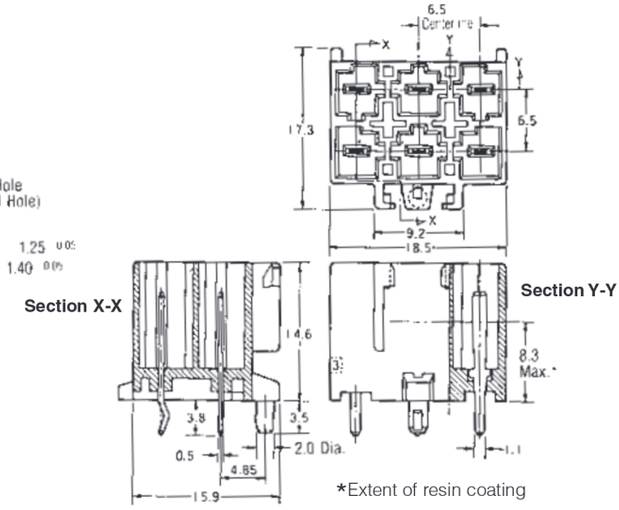

*Extent of resin coating

Note: All dimensions shown are metric.

Note: All part numbers are RoHS Compliant.

Catalog 82181
Revised 4-08

https://cwindustrial.co.za/

Dimensions are in inches and millimeters unless otherwise specified. Values in brackets are metric equivalents.

Dimensions are shown for reference purposes only. Specifications subject to change.

USA: 1-800-522-6752
Canada: 1-905-470-4425
Mexico: 01-800-733-8926
C. America: 52-55-1106-0803

South America: 55-11-2103-6000
Hong Kong: 852-2735-1628
Japan: 81-44-844-8013
UK: 44-8706-080-208

High Density Catalog.pdf 1 05/04/2022 14:47:54

Power Double Lock (PDL) Connectors (Wire-to-Board) (Continued)

6.5 mm Centerline PC Board Mount Tab Header, Vertical

12 Circuits
Wire-to-Board

Material and Finish
Housing—UL 94V-0, glass filled 6/6 Nylon
Contact—Copper alloy, Tin plated

Part Number
With Boss, With kink
917353-1 (Natural)
Without Boss, Without kink
3-917353-1 (Natural)

Related Product Data
Mating Plug Housings
(Free-Hanging)—pages 75-76

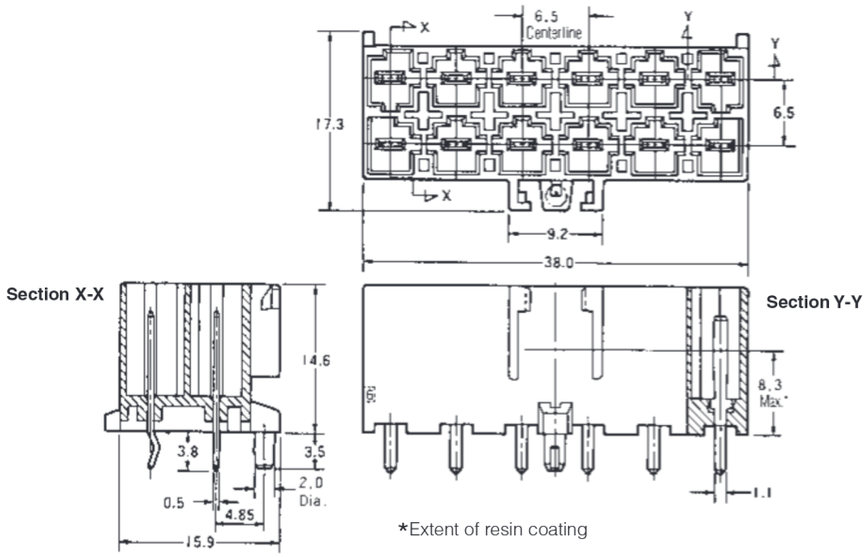

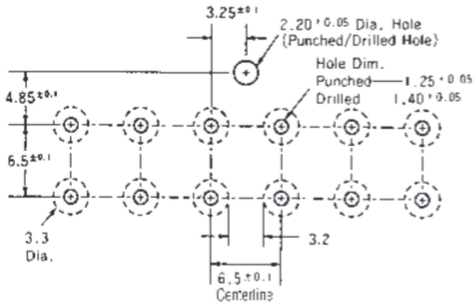

PC Board Layout
(Applicable Board Thickness: 1.6 mm)

Note: All dimensions shown are metric.
Note: All part numbers are RoHS Compliant.

Catalog 82181
Revised 4-08
https://cwindustrial.co.za/

Dimensions are in inches and millimeters unless otherwise specified. Values in brackets are metric equivalents.

Dimensions are shown for reference purposes only. Specifications subject to change.

USA: 1-800-522-6752
Canada: 1-905-470-4425
Mexico: 01-800-733-8926
C. America: 52-55-1106-0803
South America: 55-11-2103-6000
Hong Kong: 852-2735-1628
Japan: 81-44-844-8013
UK: 44-8706-080-208

High Density Catalog.pdf 1 05/04/2022 14:48:30

Engineering Notes

Catalog 82181
Revised 4-08

https://cwindustrial.co.za/

Dimensions are in inches and millimeters unless otherwise specified. Values in brackets are metric equivalents.

Dimensions are shown for reference purposes only. Specifications subject to change.

USA: 1-800-522-6752
Canada: 1-905-470-4425
Mexico: 01-800-733-8926
C. America: 52-55-1106-0803

South America: 55-11-2103-6000
Hong Kong: 852-2735-1628
Japan: 81-44-844-8013
UK: 44-8706-080-208

High Density Catalog.pdf 1 05/04/2022 14:48:47

Mini-Universal MATE-N-LOK Connectors

Product Facts

- Compact, durable housings
- Pins and sockets can be accommodated in the same housings
- Contacts fully protected in the housings. Both pins and sockets can be used on the power supply wiring
- Fully polarized to provide proper plug-to-cap mating incorporating a positive locking mechanism to help prevent accidental disengagement of mated connectors. Also facilitates panel mounting
- Free-hanging or panel mount
- Housings available in 1, 2, 3, 4, 6, 9, 12 and 15 circuit configuration for wire-to-wire connection
- Connectors can be mounted to .031-.079 [0.79-2.00] thick panels
- Printed circuit board pin headers are available in 2 thru 24 circuit vertical and right-angle configurations
- Hermaphroditic housings available in 2, 3 and 4 circuits for free-hanging applications
- Low insertion/extraction forces
- Contacts accept wire size range 30-16 AWG [.05-1.2 mm²]
- Test probe contacts available
- .163 [4.14] centerline spacing
- Not for interrupting current
- Recognized under the Component Program of Underwriters Laboratories Inc., File No. E28476
- Certified by Canadian Standards Association, File No. LR 7189

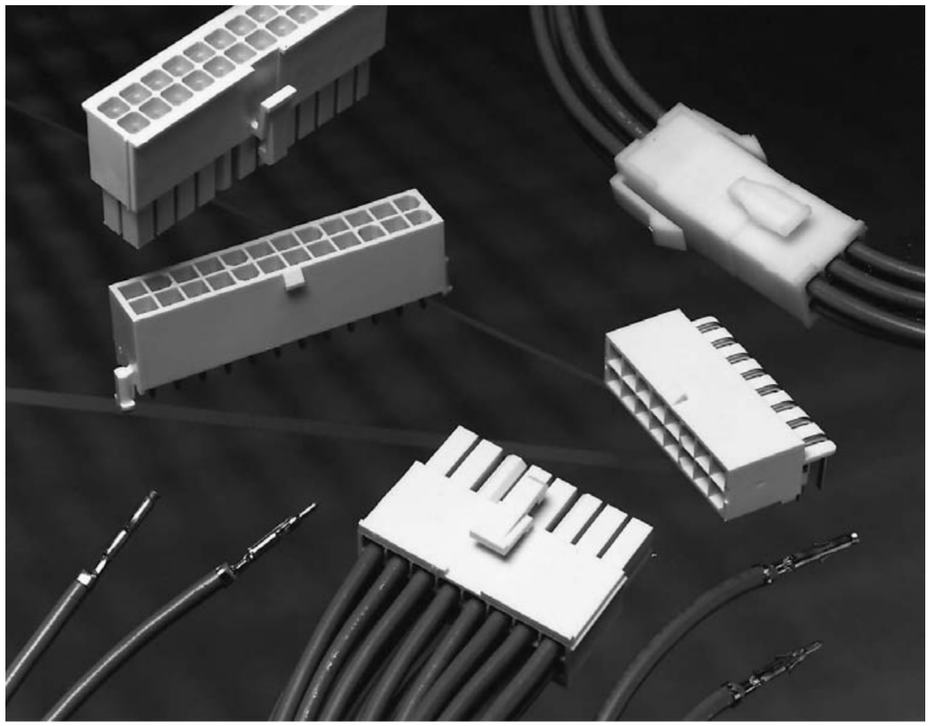

Performance Characteristics

The Mini-Universal MATE-N-LOK Connector performance characteristics found on pages 83-84 are based on free-hanging and panel mount connectors, loaded with contacts crimped on stranded wire.

Low Level Termination Resistance
20 milliohms max. total resistance between wire crimps of a mated pin and socket

Dielectric Withstanding Voltage—1.5 KVAC between adjacent circuits

Insulation Resistance—1000 megohms minimum between adjacent circuits

Voltage Rating—600 V AC or DC

Contact Retention—8 lb. min. per contact

Durability—20 cycles, mating and unmating

Technical Documents

Product Specifications

108-1542	Mini-Universal MATE-N-LOK Connectors
108-1543	Mini-Universal MATE-N-LOK Headers
108-5151	Mini-Universal MATE-N-LOK Connectors (UL94V-2)
108-5138	Mini-Universal MATE-N-LOK Connectors (UL94V-0)

Application Specification

114-16017	Mini-Universal MATE-N-LOK Connectors

Instruction Sheets

408-3234	Mini-Universal MATE-N-LOK Connectors
411-5105	Mini-Universal MATE-N-LOK Connectors

Catalog 82181
Revised 4-08

https://cwindustrial.co.za/

Dimensions are in inches and millimeters unless otherwise specified. Values in brackets are metric equivalents.

Dimensions are shown for reference purposes only. Specifications subject to change.

USA: 1-800-522-6752
Canada: 1-905-470-4425
Mexico: 01-800-733-8926
C. America: 52-55-1106-0803

South America: 55-11-2103-6000
Hong Kong: 852-2735-1628
Japan: 81-44-844-8013
UK: 44-8706-080-208

High Density Catalog.pdf 1 05/04/2022 14:50:29

Mini-Universal MATE-N-LOK Connectors (Continued)

Performance Characteristics (Continued)

Maximum Current—Maximum current rating of Mini-Universal MATE-N-LOK connectors is limited by the maximum operating temperature of the housings which is 105°C including the temperature rise of the contacts which is a maximum of 30°C. There are several variables which have a direct effect on this maximum current-carrying capability for a given connector and must be considered for each application. These variables are:

Wire Size—Larger diameter wire will carry more current since it has less internal resistance to current flow and thus generates less heat. Longer wire lengths also enhance current-carrying capabilities since the wire conducts heat away from the connector.

Connector Size—In general, the more circuits in a connector, the less current can be carried.

Ambient Temperature—The higher the ambient temperature, the less current can be carried in any given connector.

Printed Wiring Board Conductor Size—The finished trace conductor width and thickness should be maximized to allow for the greatest current-carrying capacity and heat dissipation.

Mini-Universal MATE-N-LOK connectors also will withstand the following tests:

Housing Panel Retention—26 lb. min.

Housing Lock Strength—9 lb. min.

Thermal Shock— –55°C to +105°C

Temperature-Humidity Cycling—25°C to 65°C at 95 RH

Vibration—10-55-10 cycles per minute at .06 inch total excursion

Physical Shock—18 drops, 50 G half-sine at 11 milliseconds

Current Rating Verification for 30°C Maximum Temperature Rise 100% Energized

Wire-to-Wire
Mini-Universal MATE-N-LOK Connectors — Calculated Current Table

Number of Circuits	Wire AWG						
	16	18	20	22	24	26	30
2	9.50	9.00	7.50	6.00	5.00	4.00	3.00
3	8.50	8.00	7.00	5.50	4.50	4.00	3.00
4	8.00	7.00	6.00	5.00	4.50	3.50	2.50
6	7.00	6.50	5.50	4.50	4.00	3.00	2.50
9	6.00	5.50	4.50	4.00	3.50	3.00	2.00
12	6.00	5.50	4.50	3.50	3.00	2.50	2.00
15	5.50	5.00	4.00	3.50	3.00	2.50	2.00

Values are based on initial Temperature Rise versus Current Testing and are intended to be a guide in the selection of a connector family. All applications should be tested by the end user. The values listed are per circuit, for fully loaded housings being 100% energized. **Note:** All combinations above were not tested and this chart contains interpolated and extrapolated values.

Minimum Wire Lengths for T-Rise vs. Current Testing

AWG	Min. Length (in.)	AWG	Min. Length (in.)
30	2.6	18	9.4
28	3.2	16	11.3
26	4.1	14	13.7
24	5.1	12	16.4
20	7.8	10	19.3

Note: If wire lengths used are less than those listed above, the current-carrying ability of the system will be reduced due to less heat being conducted away from the connector. The customer should fully test all applications.

Wire-to-Board

Due to the vast differences in trace geometry and printed circuit board configurations, we are unable to provide a separate current carrying chart for our printed circuit board header products. However, the above Wire-to-Wire charts may be used as a guideline for headers if the trace width and thickness is equal to the listed wire gauge. For vertical headers, only 95% of the Wire-to-Wire value should be used. For right-angle headers, only 75% of the Wire-to-Wire value should be used. The chart values are only a tool for connector selection and will require the customer to fully test their application.

Termination Resistance/Contact Crimp Tensile Force

Wire Size		Termination Resistance		Contact Crimp Tensile Force	
AWG	mm²	Test Current (Amps)	Resistance Milliohms (Max. Init.)	Force (Min.) lbs.	Force (Min.) N
30	.05	—	—	—	—
28	.08	—	—	—	—
26	.12	—	—	4	18
24	.2	—	—	7	31
22	.3	—	—	11	49
20	.5	—	—	13	58
18	.8	—	—	15	67
16	1.2	—	—	18	80

Catalog 82181
Revised 4-08

https://cwindustrial.co.za/

Dimensions are in inches and millimeters unless otherwise specified. Values in brackets are metric equivalents.

Dimensions are shown for reference purposes only. Specifications subject to change.

USA: 1-800-522-6752
Canada: 1-905-470-4425
Mexico: 01-800-733-8926
C. America: 52-55-1106-0803

South America: 55-11-2103-6000
Hong Kong: 852-2735-1628
Japan: 81-44-844-8013
UK: 44-8706-080-208

High Density Catalog.pdf 1 05/04/2022 14:50:53

Mini-Universal MATE-N-LOK Connectors (Continued)

Mini-Universal MATE-N-LOK Connector Mating Combinations

Connector Part Number					Mating Connector Part Number				
					PC Board Pin Headers				
						Vertical			Right-Angle
Number of Circuits	Flammability Rating	Style	Plug[1] Housing Part No.	Cap[1] Housing Part No.	Plating	With Drain Holes	Without Drain Holes	Blindmate	With Board Lock
1	UL94V-2	In-Line	172335-1	172327-1[4]	—	—	—	—	—
	UL94V-0	In-Line	172164-1	172156-1[4]	Tin[6]	—	—	—	1-794374-0
					Duplex[5]	—	—	—	1-794374-1
2	UL94V-2	In-Line	172336-1	172328-1[2]	—	—	—	—	—
				172343-1[4]	—	—	—	—	—
			172807-1[3]	172807-1[3]	—	—	—	—	—
	UL94V-0	In-Line	173956-1[3]	173956-1[3]	—	—	—	—	—
			172165-1	172157-1[2]	Tin[6]	1-770166-0	1-770872-0	—	1-770966-0
				172233-1[4]	Duplex[5]	1-770166-1	1-770872-1	—	1-770966-1
			794894-1[7]	794896-1[2,7]	Tin/Duplex	1-770166-1	1-770872-1	—	1-770966-1
3	UL94V-2	In-Line	172808-1[3]	172808-1[3]	—	—	—	—	—
			172337-1	172329-1[2]	Tin	—	—	—	—
				172344-1[4]	Duplex[5]	—	—	—	—
	UL94V-0	In-Line	173957-1[3]	173957-1[3]	—	—	—	—	—
			172166-1	172158-1[2]	Tin	1-770170-0	1-770873-0	—	1-770967-0
				172234-1[4]	Duplex[5]	1-770170-1	1-770873-1	—	1-770967-1
4	UL94V-2	Dual Row	172809-1[3]	172809-1[3]	—	—	—	—	—
			172338-1	172330-1[2]	—	—	—	—	—
	UL94V-0	Dual Row	173958-1[3]	173958-1[3]	—	—	—	—	—
			172167-1	172159-1[2]	Tin	1-770174-0	1-770874-0	1-794325-0	1-770968-0
					Duplex[5]	1-770174-1	1-770874-1	1-794325-1	1-770968-1
			794805-1[7]	794939-1[2,7]	Tin/Duplex	1-770174-1	1-770874-1	—	1-770968-1
6	UL94V-2	Dual Row	172339-1	172331-1[2]	—	—	—	—	—
	UL94V-0	Dual Row	172168-1	172160-1[2]	Tin	1-770178-0	1-770875-0	1-794326-0	1-770969-0
					Duplex[5]	1-770178-1	1-770875-1	1-794326-1	1-770969-1
			794895-1[7]	794940-1[2,7]	Tin/Duplex	1-770178-1	1-770875-1	—	1-770969-1
8	UL94V-0	Dual Row	770579-1	—	Tin	1-794065-0	1-794073-0	1-794327-0	1-770970-0
					Duplex[5]	1-794065-1	1-794073-1	1-794327-1	1-770970-1
			794821-1[7]	794941-1[2,7]	Tin/Duplex	1-794065-1	1-794073-1	—	1-770970-1
9	UL94V-2	Matrix	172340-1	172332-1[2]	—	—	—	—	—
	UL94V-0	Matrix	172169-1	172161-1[2]	Tin	1-770182-0	1-770876-0	1-794432-0	—
					Duplex[5]	1-770182-1	1-770876-1	1-794432-1	—
10	UL94V-0	Dual Row	770580-1	—	Tin	1-770743-0	1-770858-0	1-794328-0	1-770971-0
					Duplex[5]	1-770743-1	1-770858-1	1-794328-1	1-770971-1
			794781-1[7]	794942-1[2,7]	Tin/Duplex	1-770743-1	1-770858-1	—	1-770971-1
12	UL94V-2	Matrix	172341-1	172333-1[2]	—	—	—	—	—
	UL94V-0	Matrix	172170-1	172162-1[2]	Tin	1-770186-0	1-794040-0	1-794329-0	—
					Duplex[5]	1-770186-1	1-794040-1	1-794329-1	—
		Dual Row	770581-1	—	Tin	1-794066-0	1-770621-0	—	1-770972-0
					Duplex[5]	1-794066-1	1-770621-1	—	1-770972-1
14	UL94V-0	Dual Row	770582-1	—	Tin	1-794067-0	1-794074-0	—	1-770973-0
					Duplex[5]	1-794067-1	1-794074-1	—	1-770973-1
15	UL94V-2	Matrix	172342-1	172334-1[2]	—	—	—	—	—
	UL94V-0	Matrix	172171-1	172163-1[2]	Tin	1-770190-0	1-770859-0	1-794330-0	—
					Duplex[5]	1-770190-1	1-770859-1	1-794330-1	—
16	UL94V-0	Dual Row	770583-1	—	Tin	1-794068-0	1-794075-0	—	1-770974-0
					Duplex[5]	1-794068-1	1-794075-1	—	1-770974-1
18	UL94V-0	Dual Row	770584-1	—	Tin	1-794069-0	1-794076-0	—	1-794105-0
					Duplex[5]	1-794069-1	1-794076-1	—	1-794105-1
20	UL94V-0	Dual Row	770585-1	—	Tin	1-794070-0	1-794077-0	—	1-794106-0
					Duplex[5]	1-794070-1	1-794077-1	—	1-794106-1
22	UL94V-0	Dual Row	770586-1	—	Tin	1-794071-0	1-794078-0	—	1-794107-0
					Duplex[5]	1-794071-1	1-794078-1	—	1-794107-1
24	UL94V-0	Dual Row	770587-1	—	Tin	1-794072-0	1-794079-0	—	1-794108-0
					Duplex[5]	1-794072-1	1-794079-1	—	1-794108-1

[1]Mini-Universal MATE-N-LOK plug and cap housings accept pin or socket contacts. Use the appropriate contacts in the plug housing as required by the mating connector. All **Plugs** are **free-hanging** and **Caps** are **free-hanging** or **panel mount,** unless otherwise noted.
[2]Panel mount only.
[3]Hermaphroditic: Mates to itself.
[4]Free-hanging only.
[5]Duplex Finish — Plated with .000030 [.000762] min. gold in mating area and matte tin on solder tail end over .000050 [.00127] min. nickel underplate on entire contact.
[6]Tin Finish — Plated with .000150 [.00381] min. tin over .000050 [.00127] min. nickel underplate on entire contact.
[7]For Splash-Proof Sealing.
Note: All part numbers are RoHS Compliant.

Catalog 82181
Revised 4-08
https://cwindustrial.co.za/

Dimensions are in inches and millimeters unless otherwise specified. Values in brackets are metric equivalents.

Dimensions are shown for reference purposes only. Specifications subject to change.

USA: 1-800-522-6752
Canada: 1-905-470-4425
Mexico: 01-800-733-8926
C. America: 52-55-1106-0803
South America: 55-11-2103-6000
Hong Kong: 852-2735-1628
Japan: 81-44-844-8013
UK: 44-8706-080-208

High Density Catalog.pdf 1 05/04/2022 14:51:13

Mini-Universal MATE-N-LOK Connectors (Continued)

Contacts

Pin diameter .039 [0.99]

Material

Brass or Phosphor bronze

Stock Thickness .008 [0.20]

These contacts are to be used in Mini-Universal MATE-N-LOK Plug or Cap housings only.

Related Product Data

Product Specifications

108-1542 Mini-Universal MATE-N-LOK Connectors

108-1543 Mini-Universal MATE-N-LOK Headers

Application Specification

114-16017 Mini-Universal MATE-N-LOK Connectors

Performance Characteristics— pages 83-84

Housings — pages 87-89

Technical Documents— pages 83 and 205-206

Application Tooling— pages 207-210

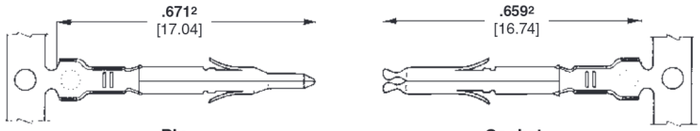

Pin Socket

Wire Size Range AWG [mm²]	Ins. Dia. Range	Material and Finish	Contact Part Numbers				HDM Applicator Part No.	Hand Tool Part No.
			Pin		Socket			
			Strip Form	Loose Pieces	Strip Form	Loose Pieces		
30-26 [.05-.12]	.035-.050 .889-1.27	Brass, Pre-tin	770835-1	794059-1	770834-1	794058-1	567418-1[3]	90717-2
		Phos. Brz., Pre-tin	—	—	770834-4	—	567418-2[3]	
		Brass, Duplex[1]	1-770835-0	1-794059-0	1-770834-0	1-794058-0	567418-3[3]	
		Phos. Brz., Duplex[1]	—	—	1-770834-1	—		
26-22 [.12-.3]	.047-.069 1.19-1.75	Brass, Pre-tin	770901-1	770985-1	770902-1	770986-1	567066-3[4]	91529-1
		Phos. Brz., Pre-tin	—	—	770902-4	—	567066-4[4]	
		Brass, Duplex[1]	1-770901-0	1-770985-0	1-770902-0	1-770986-0	567066-5[4]	
		Phos. Brz., Duplex[1]	—	—	1-770902-1	—		
22-18 [.3-.8] or 22 x (2) [.3]	.059-.094 1.50-2.39 or .067 x (2) 3.38	Brass, Pre-tin	770903-1	770987-1	770904-1	770988-1	567067-1[3]	91522-1
		Phos. Brz., Pre-tin	—	—	770904-4	—	567067-2[3]	
		Brass, Duplex[1]	1-770903-0	1-770987-0	1-770904-0	1-770988-0	567067-3[3]	
		Phos. Brz., Duplex[1]	—	—	1-770904-1	—		
20-16 [.5-1.2] or 20 x (2) [.5]	.079-.126 2.01-3.20 or .075 x (2) 1.91	Brass, Pre-tin	794406-1[2]	171638-1[2]	794407-1[2]	171639-1[2]	680582-2[3]	91536-1
		Phos. Brz., Pre-tin	—	—	794407-4[2]	—	680582-3[3]	
		Brass, Duplex[1]	1-794406-0[2]	—	1-794407-0[2]	—		
		Phos. Brz., Duplex[1]	—	—	1-794407-1[2]	—		

[1] Duplex Finish — Plated with .000030 [.000762] min. gold in mating area and .000100 [.00254] min. tin in crimping area over .000050 [.00127] min. nickel underplate on entire contact.
[2] .671 [17.04] and .659 [16.74] dimensions are .689 [17.50] for indicated part numbers.
[3] HDM Applicator part number ending in -1 is used on AMPOMATOR CLS Machine with T or G Terminators, -2 is used on AMP-O-LECTRIC Model K Machine, -3 is used on AMP-O-ELECTRIC Model G Machine. See pages 207-210 for further information.
[4] HDM Applicator part number ending in -3 is used on AMPOMATOR CLS Machine with T or G Terminators, -4 is used on AMP-O-LECTRIC Model K Machine, -5 is used on AMP-O-LECTRIC Model G Machine. See pages 207-210 for further information.

Note: **All part numbers are RoHS Compliant.**

Keying Plug

Material

UL94V-0 Nylon, white color

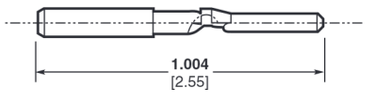

Part Number 174670-1

Test Probe Contact

Material and Finish

Phosphor bronze, nickel plated

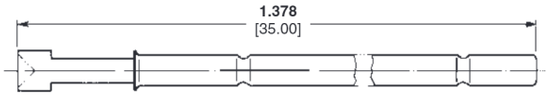

Part Number 172971-1

Notes:
1. The test probe is inserted into the housing in the same direction as indicated by the **arrow** shown to the right.
2. The test probe can be used in the Cap or Plug Housing.
3. Test probes are supplied unassembled.

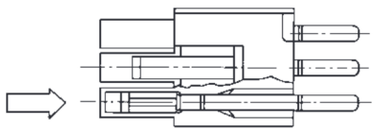



Contact Extraction Tool
No. 189727-1
IS 408-4118



Contact Insertion Tool
(For inserting contacts applied to small diameter wire)
No. 91002-1
IS 408-7347

Catalog 82181
Revised 4-08

https://cwindustrial.co.za/

Dimensions are in inches and millimeters unless otherwise specified. Values in brackets are metric equivalents.

Dimensions are shown for reference purposes only. Specifications subject to change.

USA: 1-800-522-6752
Canada: 1-905-470-4425
Mexico: 01-800-733-8926
C. America: 52-55-1106-0803

South America: 55-11-2103-6000
Hong Kong: 852-2735-1628
Japan: 81-44-844-8013
UK: 44-8706-080-208

High Density Catalog.pdf 1 05/04/2022 14:51:31

Mini-Universal MATE-N-LOK Connectors (Continued)

Housings

Free-Hanging or Panel Mount

.163 [4.14] Centerline spacing

Related Product Data

Product Specifications

108-1542 Mini-Universal MATE-N-LOK Connectors

108-1543 Mini-Universal MATE-N-LOK Headers

108-5151 Mini-Universal MATE-N-LOK Connectors (UL94V-2)

108-5138 Mini-Universal MATE-N-LOK Connectors (UL94V-0)

Performance Characteristics— pages 83-84

Contacts — page 86

Keying Plug — page 86

Test Probe Contact — page 86

Panel Cutout Recommendations— page 89

Technical Documents— pages 83 and 205-206

Mating Headers — pages 90-92

1 Circuit, Free-Hanging

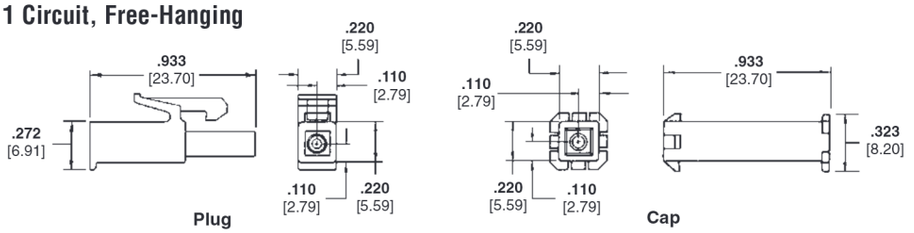

2 and 3 Circuit, In-Line

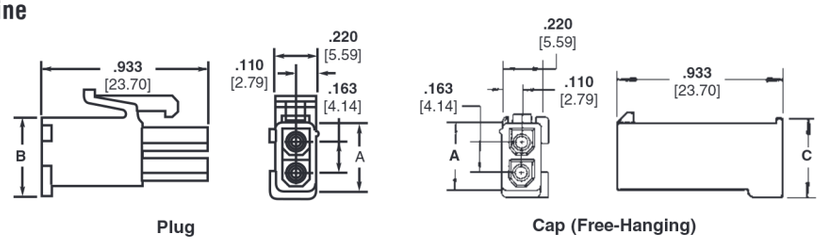

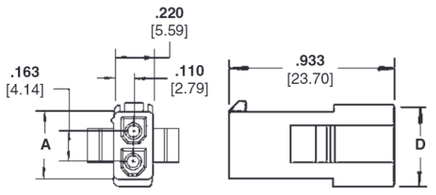

Number of Circuits	Dimensions				Housing Part Numbers[1]					
					UL94V-0 Nylon, White Color			UL94V-2 Nylon, Natural Color		
	A	B	C	D	Plug	Cap		Plug	Cap	
						Panel Mount	Free-Hanging		Panel Mount	Free-Hanging
1	—	—	—	—	172164-1	—	172156-1	172335-1	—	172327-1
2	**.386** 9.80	**.425** 10.79	**.488** 12.39	**.464** 11.78	172165-1	172157-1	172233-1	172336-1	172328-1	172343-1
3	**.551** 14.00	**.591** 15.01	**.654** 16.61	**.630** 16.00	172166-1	172158-1	172234-1	172337-1	172329-1	172344-1

Note: All part numbers are RoHS Compliant.

4 and 6 Circuit, Dual Row

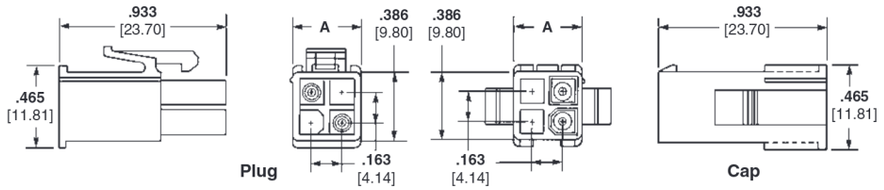

Number of Circuits	A Dim.	Housing Part Numbers[1]			
		UL94V-0 Nylon, White Color		UL94V-2 Nylon, Natural Color	
		Plug	Cap	Plug	Cap
4	**.386** 9.80	172167-1	172159-1	172338-1	172330-1
6	**.551** 14.00	172168-1	172160-1	172339-1	172331-1

1Housing part numbers shown in both charts (above) are also available in other colors: Red, Green, Blue, Black. To order connectors in these colors use the appropriate dash numbers as follows: Red 1-XXXXXX-2, Green 1-XXXXXX-5, Blue 1-XXXXXX-6, Black 1-XXXXXX-9

Note: All part numbers are RoHS Compliant.

Catalog 82181
Revised 4-08

https://cwindustrial.co.za/

Dimensions are in inches and millimeters unless otherwise specified. Values in brackets are metric equivalents.

Dimensions are shown for reference purposes only. Specifications subject to change.

USA: 1-800-522-6752
Canada: 1-905-470-4425
Mexico: 01-800-733-8926
C. America: 52-55-1106-0803

South America: 55-11-2103-6000
Hong Kong: 852-2735-1628
Japan: 81-44-844-8013
UK: 44-8706-080-208

High Density Catalog.pdf 1 05/04/2022 14:51:48

Mini-Universal MATE-N-LOK Connectors (Continued)

Housings

.163 [4.14] Centerline spacing

Related Product Data

Product Specifications

108-1542 Mini-Universal MATE-N-LOK Connectors

108-1543 Mini-Universal MATE-N-LOK Headers

108-5151 Mini-Universal MATE-N-LOK Connectors (UL94V-2)

108-5138 Mini-Universal MATE-N-LOK Connectors (UL94V-0)

Performance Characteristics—pages 83-84

Contacts — page 86

Keying Plug — page 86

Test Probe Contact — page 86

Panel Cutout Recommendations—page 89

Technical Documents—pages 83 and 205-206

Mating Headers — pages 90-92

9, 12 and 15 Circuit, Free-Hanging or Panel Mount, Matrix

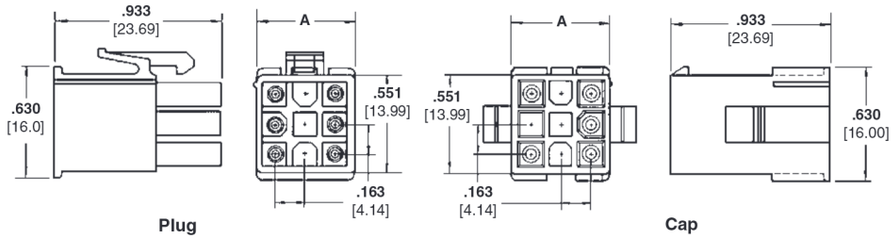

Number of Circuits	A Dim.	Housing Part Numbers[1]			
		UL94V-0 Nylon, White Color		UL94V-2 Nylon, Natural Color	
		Plug	Cap	Plug	Cap
9	**.551** 13.99	172169-1	172161-1	172340-1	172332-1
12	**.716** 18.19	172170-1	172162-1	172341-1	172333-1
15	**.882** 22.40	172171-1	172163-1	172342-1	172334-1

[1]Housing part numbers shown in chart are also available in other colors: Red, Green, Blue, Black. To order connectors in these colors use the appropriate dash numbers as follows: Red 1-XXXXXX-2, Green 1-XXXXXX-5, Blue 1-XXXXXX-6, Black 1-XXXXXX-9

Note: **All part numbers are RoHS Compliant.**

8 thru 24 Circuit, Free-Hanging, Dual Row

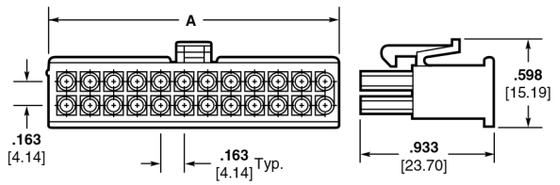

Plug

Number of Circuits	A Dim.	Part Number UL94V-0 Nylon, White Color Plug
8	**.714** 18.14	770579-1
10	**.877** 22.28	770580-1
12	**1.040** 26.42	770581-1
14	**1.203** 30.56	770582-1
16	**1.366** 34.70	770583-1
18	**1.529** 38.84	770584-1
20	**1.692** 42.98	770585-1
22	**1.855** 47.12	770586-1
24	**2.018** 51.26	770587-1

Note: **All part numbers are RoHS Compliant.**

High Density Catalog.pdf 1 05/04/2022 14:52:19

Mini-Universal MATE-N-LOK Connectors (Continued)

Housings
Hermaphroditic
Free-Hanging

Related Product Data

Product Specifications

108-1542 Mini-Universal MATE-N-LOK Connectors

108-1543 Mini-Universal MATE-N-LOK Headers

108-5151 Mini-Universal MATE-N-LOK Connectors (UL94V-2)

108-5138 Mini-Universal MATE-N-LOK Connectors (UL94V-0)

Performance Characteristics— pages 83-84

Contacts — page 86

Cap Housings — pages 87-89

Technical Documents— pages 83 and 205-206

2, 3 and 4 Circuit

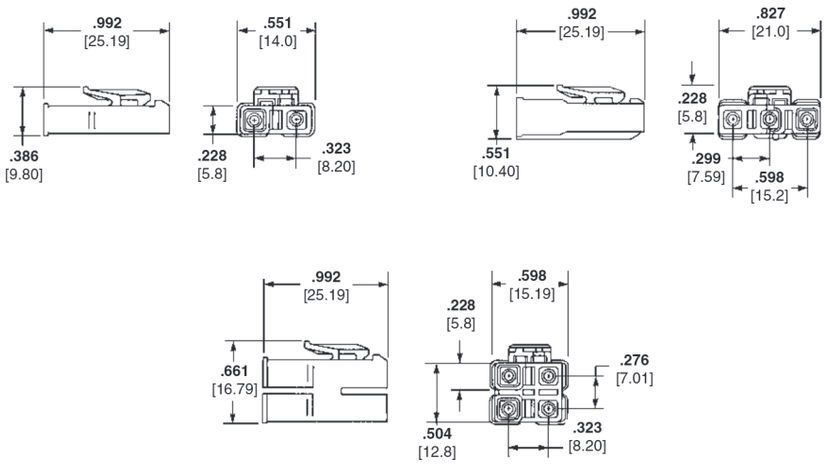

Number of Circuits	Part Numbers	
	UL94V-2 Nylon, Natural Color	UL94V-0 Nylon, White Color
2	172807-1	173956-1
3	172808-1	173957-1
4	172809-1	173958-1

Note: Housing mates to itself; 2 required per wire-to-wire connection.

Note: All part numbers are RoHS Compliant.

Recommended Cap Housing Panel Cutouts

View is from cap entry side

Recommended Panel Thickness .031—.079 [.79 – 2.01]

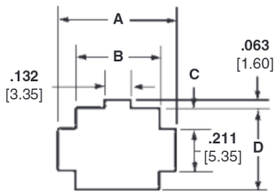

Number of Circuits	Dimensions			
	A	B	C	D
2	**.421** 10.69	**.242** 6.15	**.098** 2.49	**.407** 10.3
3	**.421** 10.69	**.242** 6.15	**.181** 4.60	**.573** 14.55
4	**.587** 14.91	**.407** 10.34	**.098** 2.49	**.407** 10.3
6	**.752** 19.10	**.573** 14.55	**.098** 2.49	**.407** 10.3
9	**.752** 19.10	**.573** 14.55	**.181** 4.60	**.573** 14.55
12	**.917** 23.29	**.738** 18.75	**.181** 4.60	**.573** 14.55
15	**1.080** 27.43	**.904** 22.96	**.181** 4.60	**.573** 14.55

Catalog 82181
Revised 4-08

https://cwindustrial.co.za/

Dimensions are in inches and millimeters unless otherwise specified. Values in brackets are metric equivalents.

Dimensions are shown for reference purposes only. Specifications subject to change.

USA: 1-800-522-6752
Canada: 1-905-470-4425
Mexico: 01-800-733-8926
C. America: 52-55-1106-0803

South America: 55-11-2103-6000
Hong Kong: 852-2735-1628
Japan: 81-44-844-8013
UK: 44-8706-080-208

High Density Catalog.pdf 1 05/04/2022 14:52:37

Mini-Universal MATE-N-LOK Connectors (Continued)

Vertical PC Board Pin Headers

.163 [4.14] Centerline spacing

Material

Housing—Nylon, white

Flammability Rating—UL94V-0

Contacts—Brass
Solder tail diameter .039 [1.00]

Related Product Data

Product Specifications

108-1542 Mini-Universal MATE-N-LOK Connectors

108-1543 Mini-Universal MATE-N-LOK Headers

108-5151 Mini-Universal MATE-N-LOK Connectors (UL94V-2)

108-5138 Mini-Universal MATE-N-LOK Connectors (UL94V-0)

Performance Characteristics—pages 83-84

Recommended PC Board Hole Layouts—page 93

Technical Documents—pages 83 and 205-206

Mating Connectors

Mini-Universal MATE-N-LOK
Plug Housings—pages 87-89

Mini-Universal MATE-N-LOK 2
Plug Housings—pages 101-102

2 and 3 Circuit, In-Line

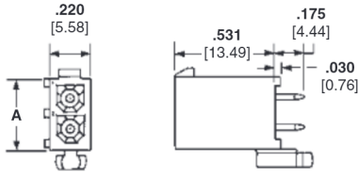

4, 6, 8, 10 and 12 Circuit, Dual Row

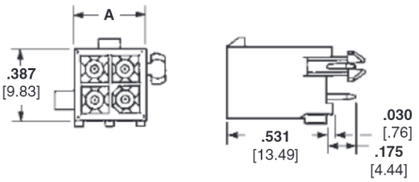

9, 12 and 15 Circuit, Matrix

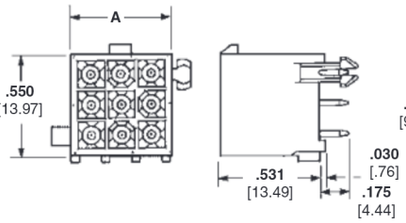

14, 16, 18, 20, 22 and 24 Circuit, Dual Row

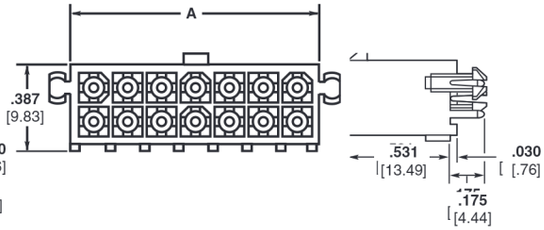

Number of Circuits	Style	A Dim.	Pin Finish	Vertical Pin Header Part Numbers		Mates with Plug Housing Part Number (Using Socket Contact)	
				With Drain Holes	Without Drain Holes	Mini-Universal MATE-N-LOK	Mini-Universal MATE-N-LOK 2
2	In-Line	**.387** 9.83	Tin[1]	1-770166-0	1-770872-0	172165-1	794184-1
			Duplex[2]	1-770166-1	1-770872-1		
3	In-Line	**.550** 13.97	Tin[1]	1-770170-0	1-770873-0	172166-1	794186-1
			Duplex[2]	1-770170-1	1-770873-1		
4	Dual Row	**.387** 9.83	Tin[1]	1-770174-0	1-770874-0	172167-1	794188-1
			Duplex[2]	1-770174-1	1-770874-1		
6	Dual Row	**.550** 13.97	Tin[1]	1-770178-0	1-770875-0	172168-1	794190-1
			Duplex[2]	1-770178-1	1-770875-1		
8	Dual Row	**.713** 18.11	Tin[1]	1-794065-0	1-794073-0	770579-1	794192-1
			Duplex[2]	1-794065-1	1-794073-1		
9	Matrix	**.551** 14.00	Tin[1]	1-770182-0	1-770876-0	172169-1	794194-1
			Duplex[2]	1-770182-1	1-770876-1		
10	Dual Row	**.877** 22.28	Tin[1]	1-770743-0	1-770858-0	770580-1	794196-1
			Duplex[2]	1-770743-1	1-770858-1		
12	Dual Row	**1.039** 26.39	Tin[1]	1-794066-0	1-770621-0	770581-1	794198-1
			Duplex[2]	1-794066-1	1-770621-1		
	Matrix	**.713** 18.11	Tin[1]	1-770186-0	1-794040-0	172170-1	794200-1
			Duplex[2]	1-770186-1	1-794040-1		
14	Dual Row	**1.202** 30.53	Tin[1]	1-794067-0	1-794074-0	770582-1	794202-1
			Duplex[2]	1-794067-1	1-794074-1		
15	Matrix	**.877** 22.28	Tin[1]	1-770190-0	1-770859-0	172171-1	794204-1
			Duplex[2]	1-770190-1	1-770859-1		
16	Dual Row	**1.365** 34.67	Tin[1]	1-794068-0	1-794075-0	770583-1	794206-1
			Duplex[2]	1-794068-1	1-794075-1		
18	Dual Row	**1.528** 38.81	Tin[1]	1-794069-0	1-794076-0	770584-1	794208-1
			Duplex[2]	1-794069-1	1-794076-1		
20	Dual Row	**1.691** 42.95	Tin[1]	1-794070-0	1-794077-0	770585-1	794210-1
			Duplex[2]	1-794070-1	1-794077-1		
22	Dual Row	**1.854** 47.09	Tin[1]	1-794071-0	1-794078-0	770586-1	794212-1
			Duplex[2]	1-794071-1	1-794078-1		
24	Dual Row	**2.017** 51.23	Tin[1]	1-794072-0	1-794079-0	770587-1	794214-1
			Duplex[2]	1-794072-1	1-794079-1		

[1] Tin Finish—Plated with .000150 [.00381] min. tin over .000050 [.00127] min. nickel underplate on entire contact.
[2] Duplex Finish—Plated with .000030 [.000762] min. gold in mating area and matte tin on solder tail end over .000050 [.00127] min. nickel underplate on entire contact.

Note: All part numbers are RoHS Compliant.

Catalog 82181
Revised 4-08

https://cwindustrial.co.za/

Dimensions are in inches and millimeters unless otherwise specified. Values in brackets are metric equivalents.

Dimensions are shown for reference purposes only. Specifications subject to change.

USA: 1-800-522-6752
Canada: 1-905-470-4425
Mexico: 01-800-733-8926
C. America: 52-55-1106-0803

South America: 55-11-2103-6000
Hong Kong: 852-2735-1628
Japan: 81-44-844-8013
UK: 44-8706-080-208

High Density Catalog.pdf 1 05/04/2022 14:53:09

Mini-Universal MATE-N-LOK Connectors (Continued)

Vertical PC Board Blindmate Pin Headers

.163 [4.14] Centerline spacing

Material

Housing—Nylon, white

Flammability Rating—UL94V-0

Contacts—Brass

Solder tail diameter .039 [1.00]

Related Product Data

Product Specifications

108-1693 Mini-Universal MATE-N-LOK 2 Connectors

108-1694 Mini-Universal MATE-N-LOK 2 Headers

Performance Characteristics—pages 83-84

Recommended PC Board Hole Layouts—page 93

Technical Documents—pages 83 and 205-206

Mating Connectors

Mini-Universal MATE-N-LOK

Plug Housings—pages 87-89

Mini-Universal MATE-N-LOK 2

Plug Housings—pages 101-102

4, 6, 8 and 10 Circuit, Dual Row

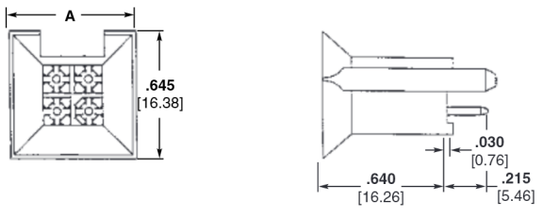

9, 12 and 15 Circuit, Matrix

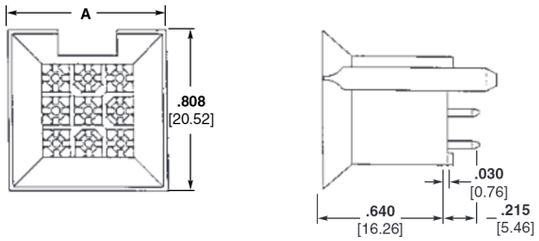

Number of Circuits	Style	A Dim.	Pin Finish	Pin Header Part Numbers With Drain Holes	Mates with Plug Housing Part Number (Using Socket Contacts)	
					Mini-Universal MATE-N-LOK	Mini-Universal MATE-N-LOK 2
4	Dual Row	**.645** 16.38	Tin[1]	1-794325-0	172167-1	794188-1
			Duplex[2]	1-794325-1		
6	Dual Row	**.808** 20.52	Tin[1]	1-794326-0	172168-1	794190-1
			Duplex[2]	1-794326-1		
8	Dual Row	**.971** 24.66	Tin[1]	1-794327-0	770579-1	794192-1
			Duplex[2]	1-794327-1		
9	Matrix	**.808** 20.52	Tin[1]	1-794432-0	172169-1	794194-1
			Duplex[2]	1-794432-1		
10	Dual Row	**1.134** 28.80	Tin[1]	1-794328-0	770580-1	794196-1
			Duplex[2]	1-794328-1		
12	Matrix	**.971** 24.66	Tin[1]	1-794329-0	172170-1	794200-1
			Duplex[2]	1-794329-1		
15	Matrix	**1.134** 28.80	Tin[1]	1-794330-0	172171-1	794204-1
			Duplex[2]	1-794330-1		

[1] Tin Finish—Plated with .000150 [.00381] min. tin over .000050 [.00127] min. nickel underplate on entire contact.

[2] Duplex Finish—Plated with .000030 [.000762] min. gold in mating area and matte tin on solder tail end over .000050 [.00127] min. nickel underplate on entire contact.

Note: All part numbers are RoHS Compliant.

Catalog 82181
Revised 4-08

https://cwindustrial.co.za/

Dimensions are in inches and millimeters unless otherwise specified. Values in brackets are metric equivalents.

Dimensions are shown for reference purposes only. Specifications subject to change.

USA: 1-800-522-6752
Canada: 1-905-470-4425
Mexico: 01-800-733-8926
C. America: 52-55-1106-0803

South America: 55-11-2103-6000
Hong Kong: 852-2735-1628
Japan: 81-44-844-8013
UK: 44-8706-080-208

High Density Catalog.pdf 1 05/04/2022 14:53:26

Mini-Universal MATE-N-LOK Connectors (Continued)

Right-Angle PC Board Pin Headers

.163 [4.14] Centerline spacing

Material

Housing — Nylon, white color

Flammability Rating — UL94V-0

Contacts — Brass

Solder tail diameter .039 [1.00]

Related Product Data

Product Specification

108-1694 Mini-Universal MATE-N-LOK 2 Headers

Performance Characteristics— pages 83-84
Recommended PC Board Hole Layouts— page 93
Technical Documents— pages 83 and 205-206

Mating Connectors

Mini-Universal MATE-N-LOK
Plug Housings — pages 87-89

Mini-Universal MATE-N-LOK 2
Plug Housings — pages 101-102

With Board Lock Feature

1, 2 and 3 Circuit, In-Line

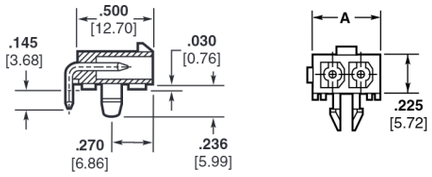

4, 6, 8, 10 and 12 Circuit, Dual Row

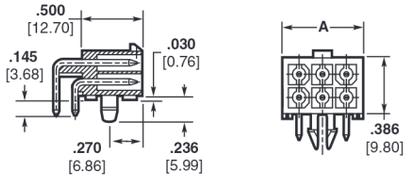

14, 16, 18, 20, 22 and 24 Circuit, Dual Row

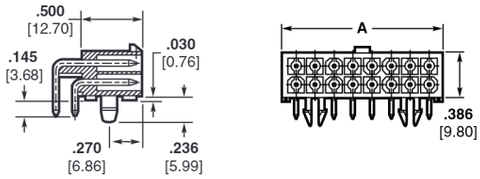

Number of Circuits	Style	A Dim.	Pin Finish	Pin Header Part Number With Board Lock	Mates with Plug Housing Part Number (Using Socket Contacts)	
					Mini-Universal MATE-N-LOK	Mini-Universal MATE-N-LOK 2
1	—	**.225** 5.72	Tin[1]	1-794374-0	172164-1	—
			Duplex[2]	1-794374-1		
2	In-Line	**.388** 9.86	Tin[1]	1-770966-0	172165-1	794184-1
			Duplex[2]	1-770966-1		
3	In-Line	**.551** 14.00	Tin[1]	1-770967-0	172166-1	794186-1
			Duplex[2]	1-770967-1		
4	Dual Row	**.388** 9.86	Tin[1]	1-770968-0	172167-1	794188-1
			Duplex[2]	1-770968-1		
6	Dual Row	**.551** 14.00	Tin[1]	1-770969-0	172168-1	794190-1
			Duplex[2]	1-770969-1		
8	Dual Row	**.714** 18.14	Tin[1]	1-770970-0	770579-1	794192-1
			Duplex[2]	1-770970-1		
10	Dual Row	**.877** 22.28	Tin[1]	1-770971-0	770580-1	794196-1
			Duplex[2]	1-770971-1		
12	Dual Row	**1.040** 26.42	Tin[1]	1-770972-0	770581-1	794198-1
			Duplex[2]	1-770972-1		
14	Dual Row	**1.203** 30.56	Tin[1]	1-770973-0	770582-1	794202-1
			Duplex[2]	1-770973-1		
16	Dual Row	**1.366** 34.70	Tin[1]	1-770974-0	770583-1	794206-1
			Duplex[2]	1-770974-1		
18	Dual Row	**1.529** 38.84	Tin[1]	1-794105-0	770584-1	794208-1
			Duplex[2]	1-794105-1		
20	Dual Row	**1.692** 42.98	Tin[1]	1-794106-0	770585-1	794210-1
			Duplex[2]	1-794106-1		
22	Dual Row	**1.855** 47.12	Tin[1]	1-794107-0	770586-1	794212-1
			Duplex[2]	1-794107-1		
24	Dual Row	**2.018** 51.26	Tin[1]	1-794108-0	770587-1	794214-1
			Duplex[2]	1-794108-1		

[1]Tin Finish — Plated with .000150 [.00381] min. tin over .000050 [.00127] min. nickel underplate on entire contact.
[2]Duplex Finish — Plated with .000030 [.000762] min. gold in mating area and matte tin on solder tail end over .000050 [.00127] min. nickel underplate on entire contact.

Note: All part numbers are RoHS Compliant.

Catalog 82181
Revised 4-08

https://cwindustrial.co.za/

Dimensions are in inches and millimeters unless otherwise specified. Values in brackets are metric equivalents.

Dimensions are shown for reference purposes only. Specifications subject to change.

USA: 1-800-522-6752
Canada: 1-905-470-4425
Mexico: 01-800-733-8926
C. America: 52-55-1106-0803

South America: 55-11-2103-6000
Hong Kong: 852-2735-1628
Japan: 81-44-844-8013
UK: 44-8706-080-208

High Density Catalog.pdf 1 05/04/2022 14:53:48

Mini-Universal MATE-N-LOK Connectors (Continued)

Recommended PC Board Hole Layouts for Vertical and Blindmate Headers

.062 [1.57] thick board, tolerances non-accumulative

Related Product Data

Vertical Headers— pages 90-91

2 and 3 Circuit, In-Line

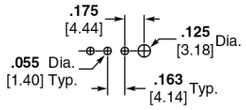

4, 6, 8, 10 and 12 Circuit, Dual Row

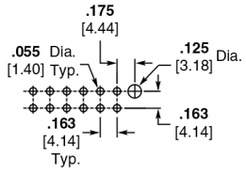

9, 12 and 15 Circuit, Matrix

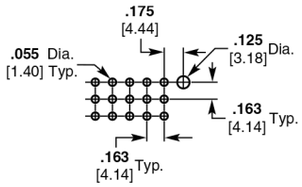

14, 16, 18, 20, 22 and 24 Circuit, Dual Row

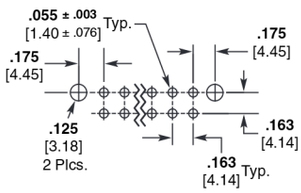

Recommended PC Board Hole Layouts for Right-Angle Headers

.062 [1.57] thick board, tolerances non-accumulative

Related Product Data

Right-Angle Headers— page 92

1 Circuit

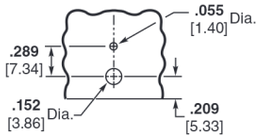

2 Circuit, In-Line

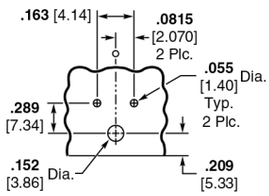

3 Circuit, In-Line

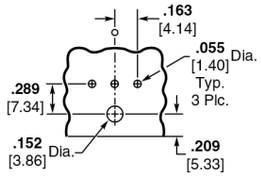

4, 8 and 12 Circuit, Dual Row

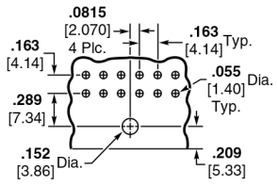

6 and 10 Circuit, Dual Row

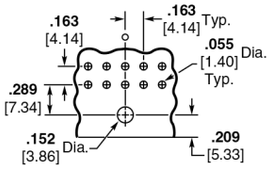

14 and 18 Circuit, Dual Row

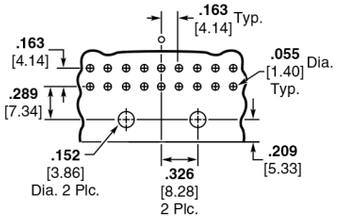

22 Circuit, Dual Row

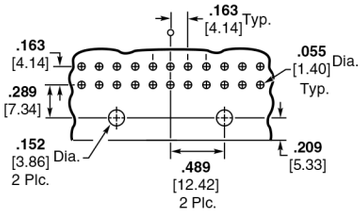

16, 20 and 24 Circuit, Dual Row

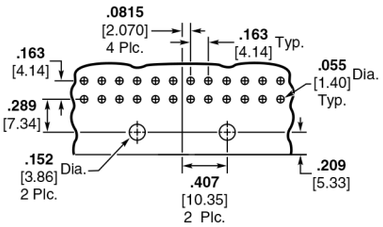

Catalog 82181
Revised 4-08

https://cwindustrial.co.za/

Dimensions are in inches and millimeters unless otherwise specified. Values in brackets are metric equivalents.

Dimensions are shown for reference purposes only. Specifications subject to change.

USA: 1-800-522-6752
Canada: 1-905-470-4425
Mexico: 01-800-733-8926
C. America: 52-55-1106-0803

South America: 55-11-2103-6000
Hong Kong: 852-2735-1628
Japan: 81-44-844-8013
UK: 44-8706-080-208

High Density Catalog.pdf 1 05/04/2022 14:54:10

Mini-Universal MATE-N-LOK Connectors (Continued)

Strain Reliefs for Plug or Cap Housings

Related Product Data

Housings— pages 87-89
Technical Documents— pages 83 and 205-206

These Strain Reliefs may also be used with AMP-DUAC Receptacle housings on page 126.

6 and 8 Circuit

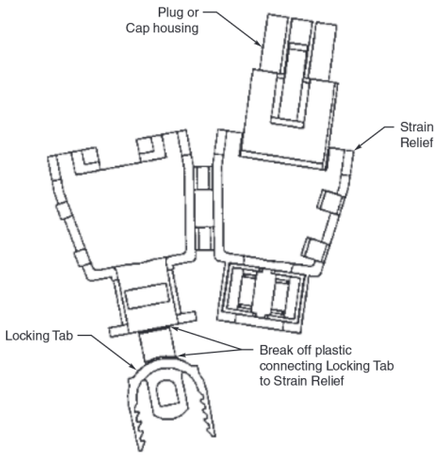

Step 1

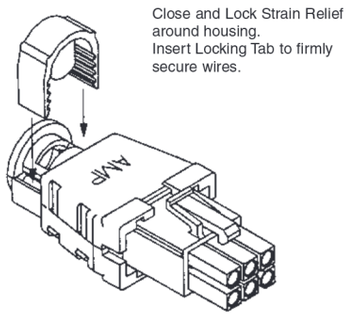

Step 2

Style	Number of Circuits	A Dim.	Wire Bundle Dia. Range	Part Numbers	
				UL94V-0 Nylon, White Color	Use With
Dual Row	6	**.920** 23.36	**.165-.220** 4.19-5.59	794423-1	172168-1 172160-1 172339-1 172331-1
	8	**.920** 23.36	**.180-.245** 4.57-6.22	794370-1	770979-1

9 Circuit

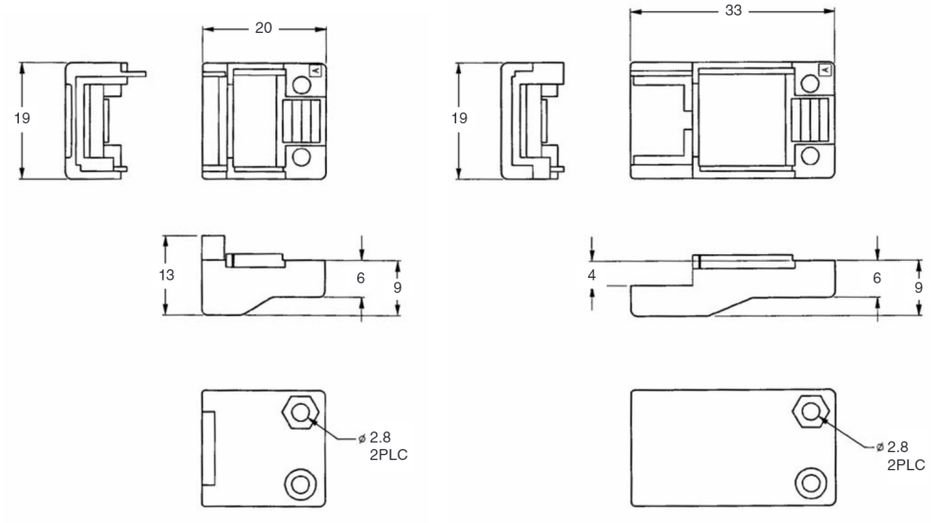

Style	Number of Circuits	Part Numbers		
			Part Number	Use With
Matrix	9	**Plug**	316454-1	172169-1 172340-1
		Cap	316455-1	172161-1 172332-1

Note: **All part numbers are RoHS Compliant.**

Catalog 82181
Revised 4-08

https://cwindustrial.co.za/

Dimensions are in inches and millimeters unless otherwise specified. Values in brackets are metric equivalents.

Dimensions are shown for reference purposes only. Specifications subject to change.

USA: 1-800-522-6752
Canada: 1-905-470-4425
Mexico: 01-800-733-8926
C. America: 52-55-1106-0803

South America: 55-11-2103-6000
Hong Kong: 852-2735-1628
Japan: 81-44-844-8013
UK: 44-8706-080-208

High Density Catalog.pdf 1 05/04/2022 14:54:37

Mini-Universal MATE-N-LOK Sealed Connector System

Product Facts — Sealed Connector System

- Splash-proof design allows use in areas where high humidity, intermittent liquid splashing or foam-in applications require a sealed connector for improved electrical performance
- Wire-to-wire and wire-to-board
- Dual row, 2 to 10 positions (even only) and 16 positions
- Mates with all standard Mini-Universal MATE-N-LOK connector housings and pin headers (except Blindmate)
- Positive, polarized keyed and latched orientation to ease application
- Utilizes proven Mini-Universal MATE-N-LOK contacts with existing application tooling
- Tested to Sealing Level of IP56 and IP57 per IEC 60529
- Primarily used in Appliance, Vending and HVAC applications
- Compact, durable housings
- Pins and sockets can be accommodated in the same housings
- Contacts fully protected in the housings. Both pins and sockets can be used on the power supply wiring
- Fully polarized to provide proper plug-to-cap mating incorporating a positive locking mechanism to help prevent accidental disengagement of mated connectors. Also facilitates panel mounting
- Free-hanging or panel mount
- Connectors can be mounted to .031-.079 [0.79-2.00] thick panels
- With seals, contacts accept wire size range 26-18 AWG [.12-.8 mm²] with insulation diameter of .040-.083 [1.02-2.11]
- .163 [4.14] centerline spacing
- Not for interrupting current

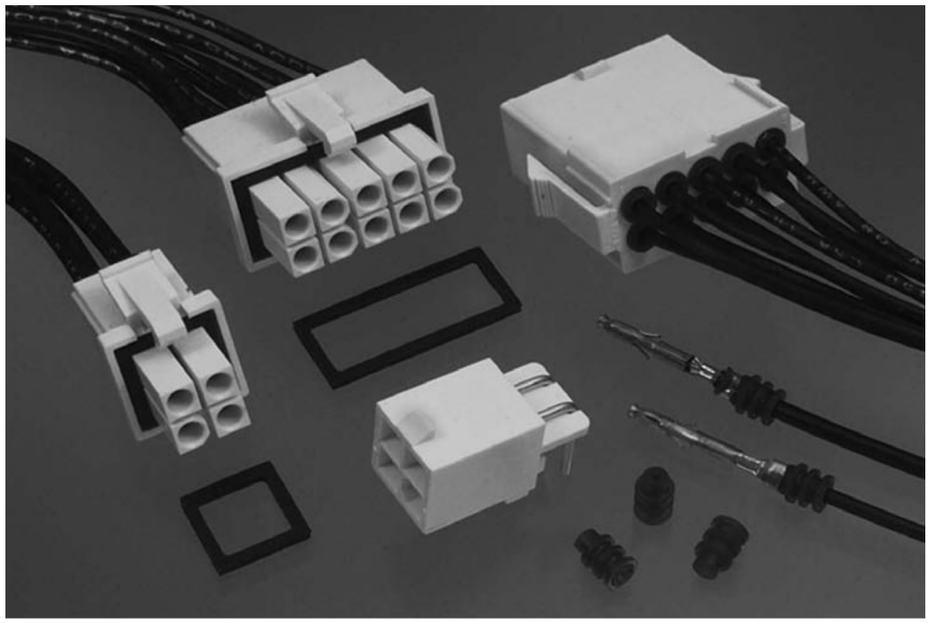

Performance Characteristics

The Mini-Universal MATE-N-LOK Connector performance characteristics found on pages 95-96 are based on free-hanging and panel mount connectors, loaded with contacts crimped on stranded wire.

Low Level Termination Resistance 20 milliohms max. total resistance between wire crimps of a mated pin and socket

Dielectric Withstanding Voltage—1.5 KVAC between adjacent circuits

Insulation Resistance—1000 megohms minimum between adjacent circuits

Voltage Rating—600 V AC or DC

Contact Retention—8 lb. min. per contact

Durability—20 cycles, mating and unmating

Technical Documents

Product Specifications

108-1542-2	Mini-Universal MATE-N-LOK Splash-Proof Seals
108-1542	Mini-Universal MATE-N-LOK Connectors
108-1543	Mini-Universal MATE-N-LOK Headers

Application Specification

114-13089	Mini-Universal MATE-N-LOK Sealed Connector

Instruction Sheets

408-3234	Mini-Universal MATE-N-LOK Connectors
411-5105	Mini-Universal MATE-N-LOK Connectors

Catalog 82181
Revised 4-08
https://cwindustrial.co.za/

Dimensions are in inches and millimeters unless otherwise specified. Values in brackets are metric equivalents.

Dimensions are shown for reference purposes only. Specifications subject to change.

USA: 1-800-522-6752
Canada: 1-905-470-4425
Mexico: 01-800-733-8926
C. America: 52-55-1106-0803
South America: 55-11-2103-6000
Hong Kong: 852-2735-1628
Japan: 81-44-844-8013
UK: 44-8706-080-208

High Density Catalog.pdf 1 05/04/2022 14:55:17

Mini-Universal MATE-N-LOK Sealed Connector System (Continued)

Plug

Part Number 794894-1
(2 position shown)

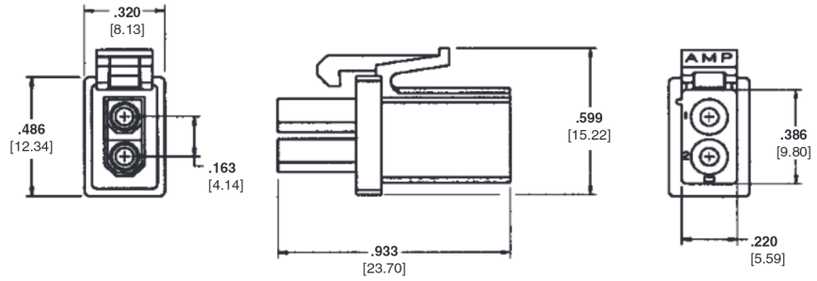

Cap

Part Number 794896-1
(2 position shown)

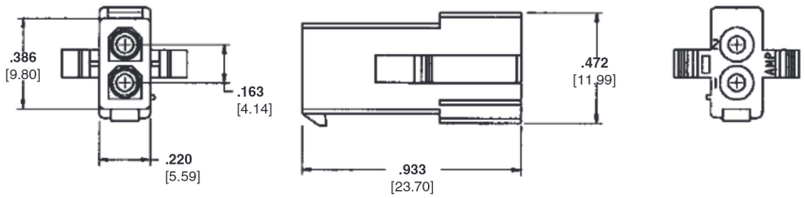

Individual Wire Seals

Single Housing Cavity Plug Seal

Part Number 794995-1

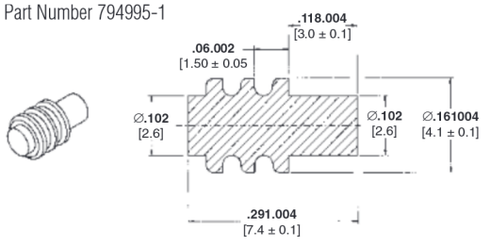

Single Wire Seal

Part Number 794758-1

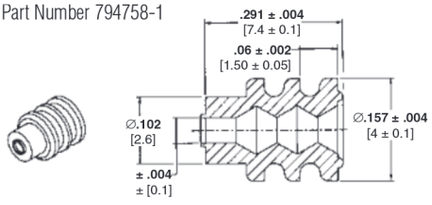

Interface Seals

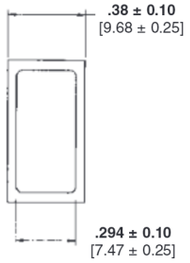

Number of Positions	Interface Seals	Plug for Sealing	Cap for Sealing	Vertical Headers for Sealing	Right Angle Headers for Sealing
2	794772-2	794894-1	794896-1	1-770872-X	1-770966-X
4	794772-4	794805-1	794939-1	1-770874-X	1-770968-X
6	794772-6	794895-1	794940-1	1-770875-X	10770969-X
8	794772-8	794821-1	794941-1	1-794073-X	1-770970-X
10	1-794772-0	794781-1	794942-1	1-770858-X	1-770971-X
16	1-1586362-6	794824-1	—	1-794075-X	1-770974-X

-0 for tin finish, -1 for duplex. See Mini-Universal MATE-N-LOK section for details

Individual Wire Seal Contacts

Wire Size Range AWG [mm²]	Ins. Dia. Range	Material and Finish	Contact Part Numbers (for use with Single Wire Seals) Pin Strip Form	Pin Loose Piece	Socket Strip Form	Socket Loose Piece	HDM Applicator Part No.	Hand Tool Part No.
26-22 [.12-.3]	**.040-.060** 1.02-1.52	Brass, Pre-tin	770901-1	770985-1	770902-1	770986-1	567066-3[3]	
		Brass, Duplex[1]	1-770901-0	1-770985-0	1-770902-0	1-770986-0	567066-4[3]	91529-1
							567066-5[3]	
22-18 [.3-.8]	**.050-.083** 1.27-2.11	Brass, Pre-tin	770903-1	770987-1	770904-1	770988-1	567067-1[2]	
		Brass, Duplex[1]	1-770903-0	1-770987-0	1-770904-0	1-770988-0	567067-2[2]	91522-1
							567067-3[2]	

[1] Duplex Finish — Plated with .000030 [.000762] min. gold in mating area and .000100 [.00254] min. tin in crimping area over .000050 [.00127] min. nickel underplate on entire contact.
[2] HDM Applicator part number ending in -1 is used on AMPOMATOR CLS Machine with T or G Terminators, -2 is used on AMP-O-LECTRIC Model K Machine, -3 is used on AMP-O-ELECTRIC Model G Machine. See pages 207-210 for further information.
[3] HDM Applicator part number ending in -3 is used on AMPOMATOR CLS Machine with T or G Terminators, -4 is used on AMP-O-LECTRIC Model K Machine, -5 is used on AMP-O-LECTRIC Model G Machine. See pages 207-210 for further information.

Note: Ganged Wire Seals are available; contact Technical Support.

Catalog 82181
Revised 4-08

https://cwindustrial.co.za/

Dimensions are in inches and millimeters unless otherwise specified. Values in brackets are metric equivalents.

Dimensions are shown for reference purposes only. Specifications subject to change.

USA: 1-800-522-6752
Canada: 1-905-470-4425
Mexico: 01-800-733-8926
C. America: 52-55-1106-0803

South America: 55-11-2103-6000
Hong Kong: 852-2735-1628
Japan: 81-44-844-8013
UK: 44-8706-080-208

High Density Catalog.pdf 1 05/04/2022 14:55:39

Mini-Universal MATE-N-LOK Connectors (Continued)

New: Mini Universal Gang Seals No Seal Crimping Required!

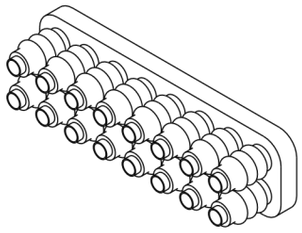

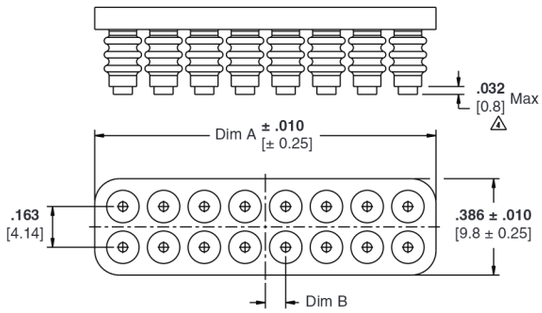

Interface Seals

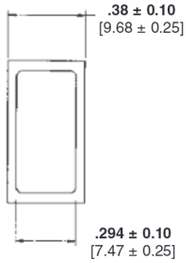

Number of Positions	Interface Seals	Gang Wire Seal	Plug for Sealing	Cap for Sealing	Vertical Headers for Sealing*	Right Angle Headers for Sealing*
2	794772-2	1586359-2	794894-1	794896-1	1-770872-X	1-770966-X
4	794772-4	1586359-4	794805-1	794939-1	1-770874-X	1-770968-X
6	794772-6	1586359-6	794895-1	794940-1	1-770875-X	1-770969-X
8	794772-8	1586359-8	794821-1	794941-1	1-794073-X	1-770970-X
10	1-794772-0	1-1586359-0	794781-1	794942-1	1-770858-X	1-770971-X
16	1-1586362-6	1-1586359-6	794824-1	—	1-794075-X	1-770974-X

*-0 for tin finish, -1 for duplex. See Mini-Universal MATE-N-LOK section for details

Gang Wire Seal Contacts

Wire Size Range	Insulation Range	Material Finish	Pin		Socket	
			Strip Form	Loose Piece	Strip Form	Loose Piece
16 AWG	.050 - .083	Brass, Pre-tin Brass, Duplex[1]	1586537-1 1586537-3	— —	1586538-1 1586538-3	— —
18 - 22 AWG	.050 - .083	Brass, Pre-tin Brass, Duplex	794440-1 794440-3	— —	794831-1 794831-3	— —
22 - 26 AWG	.050 - .069	Brass, Pre-tin Brass, Duplex[1]	770901-1 1-770901-0	770985-1 1-770985-0	770902-1 1-770902-0	770986-1 1-770986-0

[1] Duplex Finish — Plated with .000030 [.000762] min. gold in mating area and .000100 [.00254] min. tin in crimping area over .000050 [.00127] min. nickel underplate on entire contact.

Catalog 82181
Revised 4-08

https://cwindustrial.co.za/

Dimensions are in inches and millimeters unless otherwise specified. Values in brackets are metric equivalents.

Dimensions are shown for reference purposes only. Specifications subject to change.

USA: 1-800-522-6752
Canada: 1-905-470-4425
Mexico: 01-800-733-8926
C. America: 52-55-1106-0803

South America: 55-11-2103-6000
Hong Kong: 852-2735-1628
Japan: 81-44-844-8013
UK: 44-8706-080-208

High Density Catalog.pdf 1 05/04/2022 14:56:08

Engineering Notes

Catalog 82181
Revised 4-08

https://cwindustrial.co.za/

Dimensions are in inches and millimeters unless otherwise specified. Values in brackets are metric equivalents.

Dimensions are shown for reference purposes only. Specifications subject to change.

USA: 1-800-522-6752
Canada: 1-905-470-4425
Mexico: 01-800-733-8926
C. America: 52-55-1106-0803

South America: 55-11-2103-6000
Hong Kong: 852-2735-1628
Japan: 81-44-844-8013
UK: 44-8706-080-208

High Density Catalog.pdf 1 05/04/2022 14:56:26

Mini-Universal MATE-N-LOK 2 Connectors

Product Facts

- One molded piece, secondary locking plug and cap housing assemblies
- Three-point stabilization to provide better terminal position
- Fully polarized to provide proper plug-to-cap mating
- Lanceless contacts for tangle-free handling
- Toolless contact removal
- Tin or duplex gold plated contacts
- Available in 2 through 24 circuit sizes wire-to-wire and wire-to-board
- Mates with standard Mini-Universal MATE-N-LOK headers and connectors
- Contacts available in strip and loose piece
- Polarized housings available in UL 94V-0 or UL 94V-2 flammability rated material
- Mini-Universal MATE-N-LOK 2 pins and sockets can be intermixed in Mini-Universal MATE-N-LOK 2 housings
- Mini-Universal MATE-N-LOK 2 pins and sockets can not be used in standard Mini-Universal MATE-N-LOK housings
- Contacts accept wire size range 30-16 AWG [.05-1.2 mm²]
- .163 [4.14] centerline spacing
- Not for interrupting current
- Recognized under the Component Program of Underwriters Laboratories Inc. to US and Canadian Standards, File No. E28476

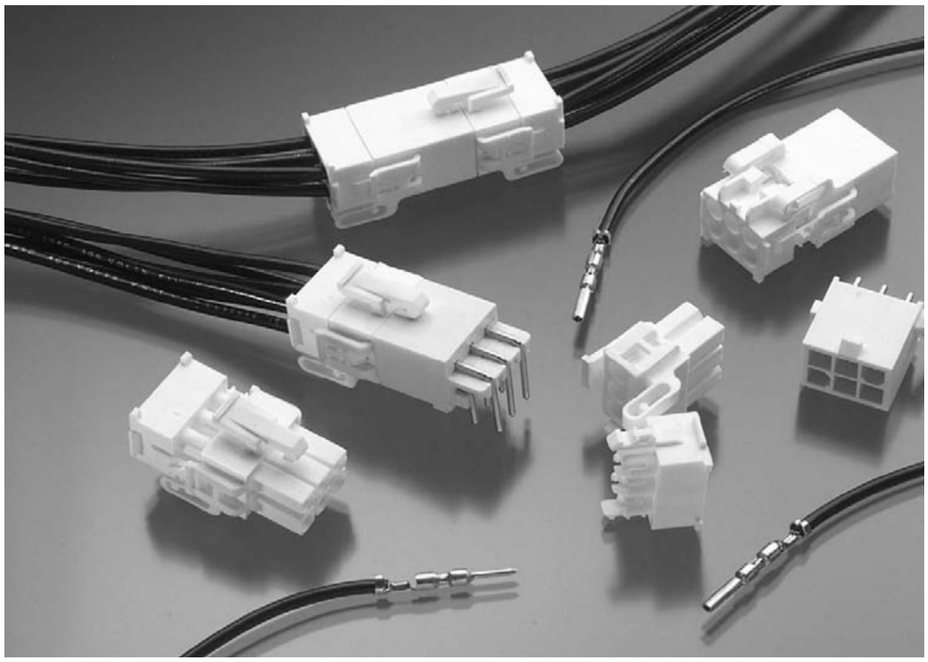

Performance Characteristics

The Mini-Universal MATE-N-LOK 2 Connector performance characteristics found on pages 99-100 are based on free-hanging connectors, loaded with contacts crimped on stranded wire.

Low Level Termination Resistance 20 milliohms max. total resistance between wire crimps of a mated pin and socket

Dielectric Withstanding Voltage 1500 V AC or DC between adjacent circuits at sea level

Insulation Resistance— 100 megohms minimum between adjacent circuits

Voltage Rating—600 V AC or DC

Contact Retention—15 lb. min. per contact

Durability—25 cycles, mating and unmating

Current Rating—up to 10.5 amps per circuit; 2 position

Mating Force—2.5 lb. max. per circuit

Unmating Force—0.25 lb. minimum per circuit

Wire Size		Termination Resistance		Contact Crimp Tensile Force	
AWG	mm²	Test Current (Amps)	Resistance Milliohms (Max. Init.)	Force (Min.) lbs.	Force (Min.) N
30	.05	—	—	—	—
28	.08	—	—	—	—
26	.12	—	—	4	18
24	.2	—	—	—	—
22	.3	—	—	11	49
20	.5	—	—	13	58
18	.8	—	—	15	67
16	1.2	—	—	18	80

Technical Documents

Product Specifications

108-1693 Mini-Universal MATE-N-LOK 2 Connectors

108-1694 Mini-Universal MATE-N-LOK 2 Headers

Application Specification

114-1111 Mini-Universal MATE-N-LOK 2 Connectors

Instruction Sheet

408-3393 Mini-Universal MATE-N-LOK 2 Connectors

Mini-Universal MATE-N-LOK 2 connectors also will withstand the following tests:

Housing Lock Strength—6 lb. min.

Thermal Shock— -55°C to +105°C

Temperature-Humidity Cycling—25°C to 65°C at 95 RH

Vibration—10-55-10 cycles per minute at .06 inch total excursion

Physical Shock—18 drops, 50 G half-sine at 11 milliseconds

Catalog 82181
Revised 4-08

https://cwindustrial.co.za/

Dimensions are in inches and millimeters unless otherwise specified. Values in brackets are metric equivalents.

Dimensions are shown for reference purposes only. Specifications subject to change.

USA: 1-800-522-6752
Canada: 1-905-470-4425
Mexico: 01-800-733-8926
C. America: 52-55-1106-0803

South America: 55-11-2103-6000
Hong Kong: 852-2735-1628
Japan: 81-44-844-8013
UK: 44-8706-080-208

High Density Catalog.pdf 1 05/04/2022 14:56:48

Mini-Universal MATE-N-LOK 2 Connectors (Continued)

Performance Characteristics (Continued)

Maximum Current—Maximum current rating of Mini-Universal MATE-N-LOK 2 connectors is limited by the maximum operating temperature of the housings which is 105°C (gold) or 85°C (tin) including the temperature rise of the contacts which is a maximum of 30°C. There are several variables which have a direct effect on this maximum current-carrying capability for a given connector and must be considered for each application. These variables are:

Wire Size—Larger diameter wire will carry more current since it has less internal resistance to current flow and thus generates less heat. Longer wire lengths also enhance current-carrying capabilities since the wire conducts heat away from the connector.

Connector Size—In general, the more circuits in a connector, the less current can be carried.

Ambient Temperature—The higher the ambient temperature, the less current can be carried in any given connector.

Printed Wiring Board Conductor Size—The finished trace conductor width and thickness should be maximized to allow for the greatest current-carrying capacity and heat dissipation.

Current Rating Verification for 30°C Maximum Temperature Rise 100% Energized

2 Circuit Connector (Wire-to-Wire)

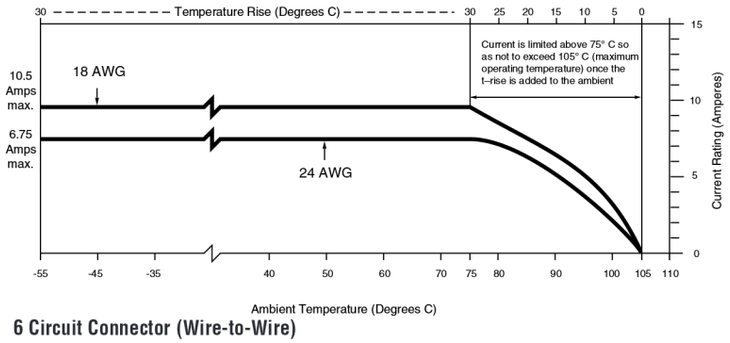

6 Circuit Connector (Wire-to-Wire)

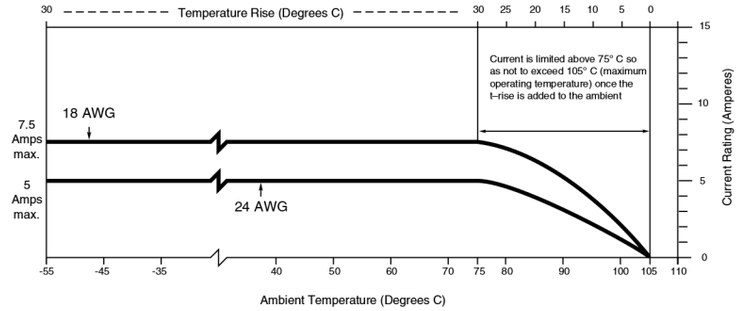

Contacts

Pin diameter .039 [0.99]

Material

Brass

Stock Thickness .010 [0.25]

These contacts can be used in either Mini-Universal MATE-N-LOK 2 Plug or Cap housings **only**.

Related Product Data

Product Specifications

108-1693 Mini-Universal MATE-N-LOK 2 Connectors

108-1694 Mini-Universal MATE-N-LOK 2 Headers

Application Specification

114-1111 Mini-Universal MATE-N-LOK 2 Connectors

Performance Characteristics—pages 99-100
Housings — pages 101-102
Technical Documents—pages 99 and 205-206

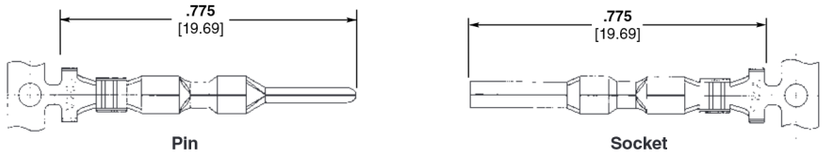

Not to be used with Mini-Universal MATE-N-LOK Connectors

Wire Size Range AWG [mm²]	Ins. Dia. Range	Finish	Contact Part Numbers				HDM Applicator Part No.	Hand Tool Part No.
			Pin		Socket			
			Strip Form	Loose Piece	Strip Form	Loose Piece		
30-26 [.05-.12]	**.035-.050** .889-1.27	Pre-tin	794216-1	794224-1	794217-1	794225-1	567418-1[2] 567418-2[2] 567418-3[2]	90717-2
		Duplex[1]	1-794216-0	1-794224-0	1-794217-0	1-794225-0		
26-22 [.12-.3]	**.047-.069** 1.19-1.75	Pre-tin	794218-1	794226-1	794219-1	794227-1	567066-3[3] 567066-4[3] 567066-5[3]	91529-1
		Duplex[1]	1-794218-0	1-794226-0	1-794219-0	1-794227-0		
22-18 [.3-.8]	**.059-.094** 1.50-2.39	Pre-tin	794220-1	794228-1	794221-1	794229-1	680854-1[2] 680854-2[2] 680854-3[2]	91522-1
		Duplex[1]	1-794220-0	1-794228-0	1-794221-0	1-794229-0		
20-16 [.5-1.2]	**.079-.126** 2.01-3.20	Pre-tin	794222-1	794230-1	794223-1	794231-1	680582-2[2] 680582-3[2]	91594-1
		Duplex[1]	1-794222-0	1-794230-0	1-794223-0	1-794231-0		

[1]Duplex Finish — Plated with .000030 [.000762] min. gold in mating area and .000100 [.00254] min. tin in crimping area over .000050 [.00127] min. nickel underplate on entire contact.
[2]HDM Applicator part number ending in -1 is used on AMPOMATOR CLS Machine with T or G Terminators, -2 is used on AMP-O-LECTRIC Model K Machine, -3 is used on AMP-O-ELECTRIC Model G Machine.
[3]HDM Applicator part number ending in -3 is used on AMPOMATOR CLS Machine with T or G Terminators, -4 is used on AMP-O-LECTRIC Model K Machine, -5 is used on AMP-O-LECTRIC Model G Machine.
See pages 207-210 for further information.
Note: All part numbers are RoHS Compliant.

Catalog 82181
Revised 4-08
https://cwindustrial.co.za/

Dimensions are in inches and millimeters unless otherwise specified. Values in brackets are metric equivalents.

Dimensions are shown for reference purposes only. Specifications subject to change.

USA: 1-800-522-6752
Canada: 1-905-470-4425
Mexico: 01-800-733-8926
C. America: 52-55-1106-0803
South America: 55-11-2103-6000
Hong Kong: 852-2735-1628
Japan: 81-44-844-8013
UK: 44-8706-080-208

High Density Catalog.pdf 1 05/04/2022 14:57:07

Mini-Universal MATE-N-LOK 2 Connectors (Continued)

Housings

Free-Hanging

.163 [4.14] Centerline spacing

Related Product Data

Product Specifications

108-1693 Mini-Universal MATE-N-LOK 2 Connectors

108-1694 Mini-Universal MATE-N-LOK 2 Headers

Performance Characteristics—pages 99-100
Contacts — page 100
Technical Documents—pages 99 and 205-206
Mating Headers—pages 103-105

2 and 3 Circuit, In-Line

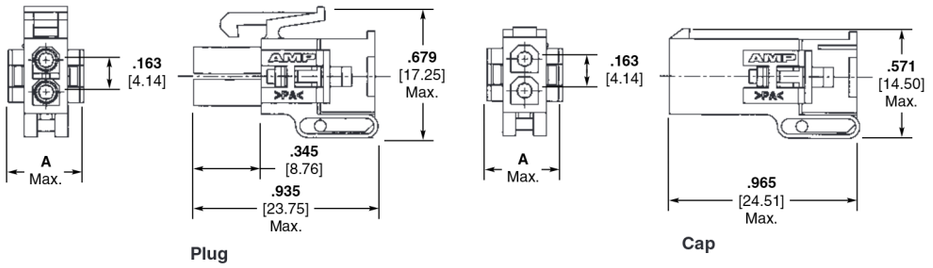

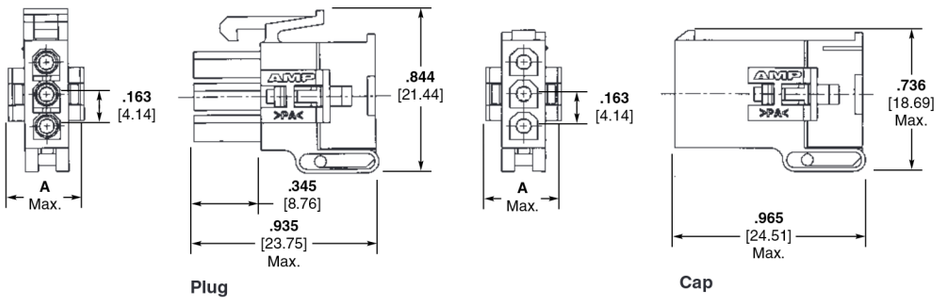

Number of Circuits	A Dimension	Housing Part Numbers			
		UL94V-0 Nylon, White Color		UL94V-2 Nylon, Natural Color	
		Plug	Cap	Plug	Cap
2	.405 10.29	794184-1	794185-1	794237-1	794238-1
3	.405 10.29	794186-1	794187-1	794239-1	794240-1

4 and 6 Circuit, Dual Row

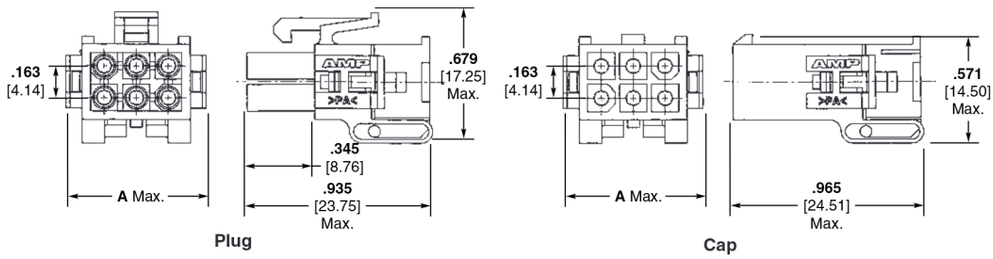

Number of Circuits	A Dimension	Housing Part Numbers			
		UL94V-0 Nylon, White Color		UL94V-2 Nylon, Natural Color	
		Plug	Cap	Plug	Cap
4	.571 14.50	794188-1	794189-1	794241-1	794242-1
6	.736 18.70	794190-1	794191-1	794243-1	794244-1

Keying Plug

Material

UL94V-0 Nylon, white color

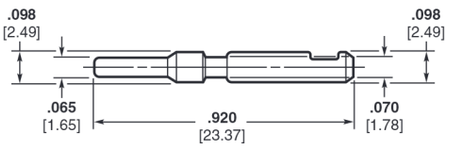

Part Number 794369-1

Note: **All part numbers are RoHS Compliant.**

Catalog 82181
Revised 4-08

https://cwindustrial.co.za/

Dimensions are in inches and millimeters unless otherwise specified. Values in brackets are metric equivalents.

Dimensions are shown for reference purposes only. Specifications subject to change.

USA: 1-800-522-6752
Canada: 1-905-470-4425
Mexico: 01-800-733-8926
C. America: 52-55-1106-0803

South America: 55-11-2103-6000
Hong Kong: 852-2735-1628
Japan: 81-44-844-8013
UK: 44-8706-080-208

High Density Catalog.pdf 1 05/04/2022 14:57:23

Mini-Universal MATE-N-LOK 2 Connectors (Continued)

Housings

Free-Hanging

.163 [4.14] Centerline spacing

Related Product Data

Product Specifications

108-1693 Mini-Universal MATE-N-LOK 2 Connectors

108-1694 Mini-Universal MATE-N-LOK 2 Headers

Performance Characteristics—pages 99-100
Contacts—page 100
Keying Plug—page 101
Technical Documents—pages 99 and 205-206
Mating Headers—pages 103-105

9, 12 and 15 Circuit, Matrix

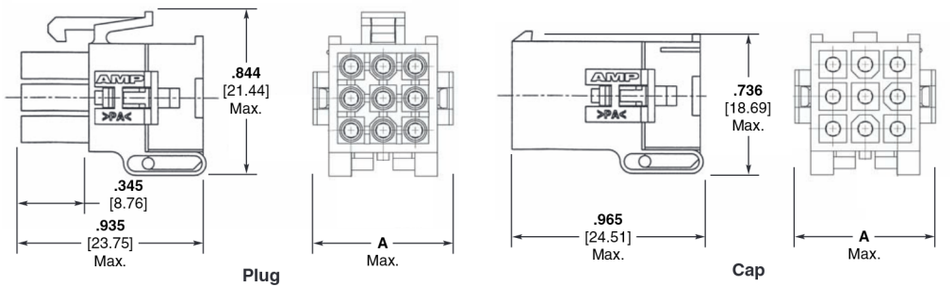

Number of Circuits	A Dimension	Housing Part Numbers			
		UL94V-0 Nylon, White Color		UL94V-2 Nylon, Natural Color	
		Plug	Cap	Plug	Cap
9	.736 18.69	794194-1	794195-1	794247-1	794248-1
12	.901 22.89	794200-1	794201-1	794253-1	794254-1
15	1.067 27.10	794204-1	794205-1	794257-1	794258-1

8 through 24 Circuit, Dual Row

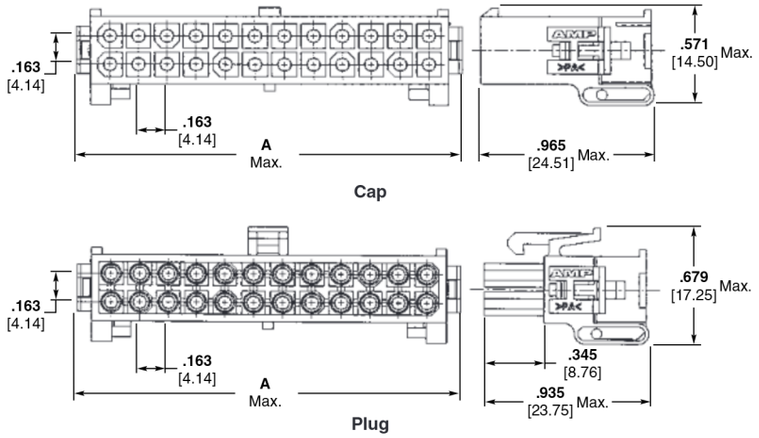

Number of Circuits	A Dimension	Housing Part Numbers			
		UL94V-0 Nylon, White Color		UL94V-2 Nylon, Natural Color	
		Plug	Cap	Plug	Cap
8	.899 22.84	794192-1	794193-1	794245-1	794246-1
10	1.062 26.98	794196-1	794197-1	794249-1	794250-1
12	1.225 31.12	794198-1	794199-1	794251-1	794252-1
14	1.388 35.26	794202-1	794203-1	794255-1	794256-1
16	1.551 39.40	794206-1	794207-1	794259-1	794260-1
18	1.714 43.54	794208-1	794209-1	794261-1	794262-1
20	1.877 47.68	794210-1	794211-1	794263-1	794264-1
22	2.040 51.82	794212-1	794213-1	794265-1	794266-1
24	2.203 55.96	794214-1	794215-1	794267-1	794268-1

Note: **All part numbers are RoHS Compliant.**

Catalog 82181
Revised 4-08

https://cwindustrial.co.za/

Dimensions are in inches and millimeters unless otherwise specified. Values in brackets are metric equivalents.

Dimensions are shown for reference purposes only. Specifications subject to change.

USA: 1-800-522-6752
Canada: 1-905-470-4425
Mexico: 01-800-733-8926
C. America: 52-55-1106-0803

South America: 55-11-2103-6000
Hong Kong: 852-2735-1628
Japan: 81-44-844-8013
UK: 44-8706-080-208

High Density Catalog.pdf 1 05/04/2022 14:57:40

Mini-Universal MATE-N-LOK 2 Connectors (Continued)

Vertical PC Board Pin Headers

.163 [4.14] Centerline spacing

Material

Housing — Nylon, white

Flammability Rating — UL94V-0

Contacts — Brass
Solder tail diameter .039 [1.00]

Related Product Data

Product Specifications

108-1693 Mini-Universal MATE-N-LOK 2 Connectors

108-1694 Mini-Universal MATE-N-LOK 2 Headers

Performance Characteristics — pages 99-100

Recommended PC Board Hole Layout — page 106

Technical Documents — pages 99 and 205-206

Mating Connectors

Mini-Universal MATE-N-LOK 2
Plug Housings — pages 101-102

Mini-Universal MATE-N-LOK
Plug Housings — pages 87-89

2 and 3 Circuit, In-Line

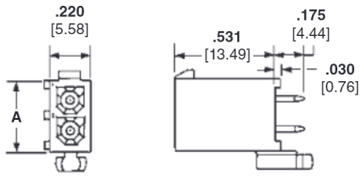

4, 6, 8, 10 and 12 Circuit, Dual Row

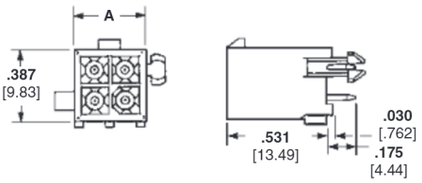

9, 12 and 15 Circuit, Matrix

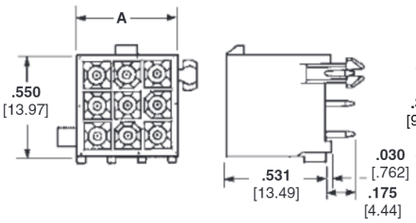

14, 16, 18, 20, 22 and 24 Circuit, Dual Row

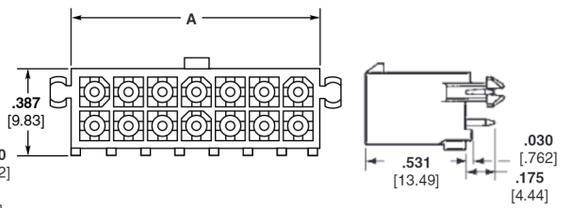

Number of Circuits	Style	A Dim.	Pin Finish	Vertical Pin Header Part Numbers With Drain Holes	Vertical Pin Header Part Numbers Without Drain Holes	Mates with Plug Housing Part Number (Using Socket Contacts) Mini-Universal MATE-N-LOK	Mates with Plug Housing Part Number (Using Socket Contacts) Mini-Universal MATE-N-LOK 2
2	In-Line	**.387** 9.83	Tin[1]	1-770166-0	1-770872-0	172165-1	794184-1
			Duplex[2]	1-770166-1	1-770872-1		
3	In-Line	**.550** 13.97	Tin[1]	1-770170-0	1-770873-0	172166-1	794186-1
			Duplex[2]	1-770170-1	1-770873-1		
4	Dual Row	**.387** 9.83	Tin[1]	1-770174-0	1-770874-0	172167-1	794188-1
			Duplex[2]	1-770174-1	1-770874-1		
6	Dual Row	**.550** 13.97	Tin[1]	1-770178-0	1-770875-0	172168-1	794190-1
			Duplex[2]	1-770178-1	1-770875-1		
8	Dual Row	**.713** 18.11	Tin[1]	1-794065-0	1-794073-0	770579-1	794192-1
			Duplex[2]	1-794065-1	1-794073-1		
9	Matrix	**.551** 14.00	Tin[1]	1-770182-0	1-770876-0	172169-1	794194-1
			Duplex[2]	1-770182-1	1-770876-1		
10	Dual Row	**.877** 22.28	Tin[1]	1-770743-0	1-770858-0	770580-1	794196-1
			Duplex[2]	1-770743-1	1-770858-1		
12	Dual Row	**1.039** 26.39	Tin[1]	1-794066-0	1-770621-0	770581-1	794198-1
			Duplex[2]	1-794066-1	1-770621-1		
	Matrix	**.713** 18.11	Tin[1]	1-770186-0	1-794040-0	172170-1	794200-1
			Duplex[2]	1-770186-1	1-794040-1		
14	Dual Row	**1.202** 30.53	Tin[1]	1-794067-0	1-794074-0	770582-1	794202-1
			Duplex[2]	1-794067-1	1-794074-1		
15	Matrix	**.877** 22.28	Tin[1]	1-770190-0	1-770859-0	172171-1	794204-1
			Duplex[2]	1-770190-1	1-770859-1		
16	Dual Row	**1.365** 34.67	Tin[1]	1-794068-0	1-794075-0	770583-1	794206-1
			Duplex[2]	1-794068-1	1-794075-1		
18	Dual Row	**1.528** 38.81	Tin[1]	1-794069-0	1-794076-0	770584-1	794208-1
			Duplex[2]	1-794069-1	1-794076-1		
20	Dual Row	**1.691** 42.95	Tin[1]	1-794070-0	1-794077-0	770585-1	794210-1
			Duplex[2]	1-794070-1	1-794077-1		
22	Dual Row	**1.854** 47.09	Tin[1]	1-794071-0	1-794078-0	770586-1	794212-1
			Duplex[2]	1-794071-1	1-794078-1		
24	Dual Row	**2.017** 51.23	Tin[1]	1-794072-0	1-794079-0	770587-1	794214-1
			Duplex[2]	1-794072-1	1-794079-1		

[1]Tin Finish — Plated with .000150 [.00381] min. tin over .000050 [.00127] min. nickel underplate on entire contact.
[2]Duplex Finish — Plated with .000030 [.000762] min. gold in mating area and matte tin on solder tail end over .000050 [.00127] min. nickel underplate on entire contact.

Note: **All part numbers are RoHS Compliant.**

Catalog 82181
Revised 4-08

https://cwindustrial.co.za/

Dimensions are in inches and millimeters unless otherwise specified. Values in brackets are metric equivalents.

Dimensions are shown for reference purposes only. Specifications subject to change.

USA: 1-800-522-6752
Canada: 1-905-470-4425
Mexico: 01-800-733-8926
C. America: 52-55-1106-0803

South America: 55-11-2103-6000
Hong Kong: 852-2735-1628
Japan: 81-44-844-8013
UK: 44-8706-080-208

High Density Catalog.pdf 1 05/04/2022 14:57:57

Mini-Universal MATE-N-LOK 2 Connectors (Continued)

Vertical PC Board Blindmate Pin Headers

.163 [4.14] Centerline spacing

Material

Housing — Nylon, white

Flammability Rating — UL94V-0

Contacts — Brass
Solder tail diameter .039 [1.00]

Related Product Data

Product Specifications

108-1693 Mini-Universal MATE-N-LOK 2 Connectors

108-1694 Mini-Universal MATE-N-LOK 2 Headers

Performance Characteristics— pages 99-100
Recommended PC Board Hole Layout—page 106
Technical Documents— pages 99 and 205-206

Mating Connectors

Mini-Universal MATE-N-LOK 2
Plug Housings— pages 101-102

Mini-Universal MATE-N-LOK
Plug Housings— pages 87-89

4, 6, 8 and 10 Circuit, Dual Row

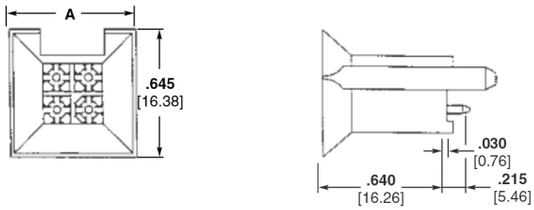

9, 12 and 15 Circuit, Matrix

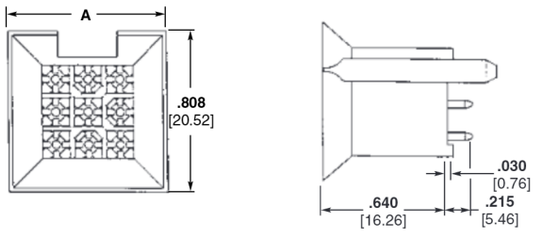

Number of Circuits	Style	A Dim.	Pin Finish	Pin Header Part Numbers with Drain Holes	Mates with Plug Housing Part Number (Using Socket Contacts)	
					Mini-Universal MATE-N-LOK	Mini-Universal MATE-N-LOK 2
4	Dual Row	**.645** 16.38	Tin[1]	1-794325-0	172167-1	794188-1
			Duplex[2]	1-794325-1		
6	Dual Row	**.808** 20.52	Tin[1]	1-794326-0	172168-1	794190-1
			Duplex[2]	1-794326-1		
8	Dual Row	**.971** 24.66	Tin[1]	1-794327-0	770579-1	794192-1
			Duplex[2]	1-794327-1		
9	Matrix	**.808** 20.52	Tin[1]	1-794432-0	172169-1	794194-1
			Duplex[2]	1-794432-1		
10	Dual Row	**1.134** 28.80	Tin[1]	1-794328-0	770580-1	794196-1
			Duplex[2]	1-794328-1		
12	Matrix	**.971** 24.66	Tin[1]	1-794329-0	172170-1	794200-1
			Duplex[2]	1-794329-1		
15	Matrix	**1.134** 28.80	Tin[1]	1-794330-0	172171-1	794204-1
			Duplex[2]	1-794330-1		

[1]Tin Finish — Plated with .000150 [.00381] min. tin over .000050 [.00127] min. nickel underplate on entire contact.
[2]Duplex Finish — Plated with .000030 [.000762] min. gold in mating area and matte tin on solder tail end over .000050 [.00127] min. nickel underplate on entire contact.

Note: All part numbers are RoHS Compliant.

Catalog 82181
Revised 4-08

https://cwindustrial.co.za/

Dimensions are in inches and millimeters unless otherwise specified. Values in brackets are metric equivalents.

Dimensions are shown for reference purposes only. Specifications subject to change.

USA: 1-800-522-6752
Canada: 1-905-470-4425
Mexico: 01-800-733-8926
C. America: 52-55-1106-0803

South America: 55-11-2103-6000
Hong Kong: 852-2735-1628
Japan: 81-44-844-8013
UK: 44-8706-080-208

High Density Catalog.pdf 1 05/04/2022 14:58:13

Mini-Universal MATE-N-LOK 2 Connectors (Continued)

Right-Angle PC Board Pin Headers

.163 [4.14] Centerline spacing

Material

Housing — Nylon, white color

Flammability Rating — UL94V-0

Contacts — Brass

Solder tail diameter .039 [1.00]

Related Product Data

Product Specification

108-1694 Mini-Universal MATE-N-LOK 2 Headers

Performance Characteristics— pages 99-100

Recommended PC Board Hole Layout— page 106

Technical Documents— pages 99 and 205-206

Mating Connectors

Mini-Universal MATE-N-LOK 2
Plug Housings— pages 101-102

Mini-Universal MATE-N-LOK
Plug Housings— pages 87-89

With Board Lock Feature

2 and 3 Circuit, In-Line

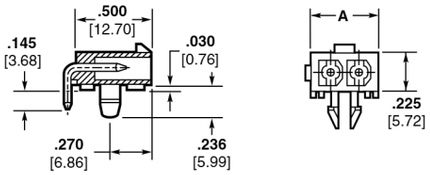

4, 6, 8, 10 and 12 Circuit, Dual Row

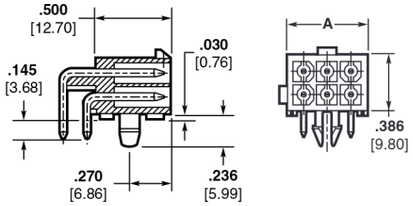

14, 16, 18, 20, 22 and 24 Circuit, Dual Row

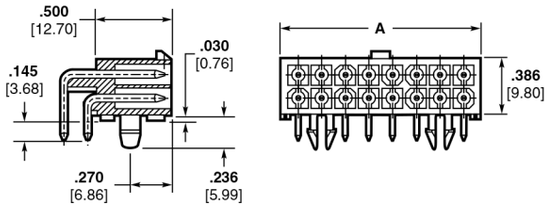

Number of Circuits	Style	A Dim.	Pin Finish	Pin Header Part Number with Board Lock	Mates with Plug Housing Part Number (Using Socket Contacts)	
					Mini-Universal MATE-N-LOK	Mini-Universal MATE-N-LOK 2
2	In-line	**.388** 9.86	Tin[1]	1-770966-0	172165-1	794184-1
			Duplex[2]	1-770966-1		
3	In-line	**.551** 14.00	Tin[1]	1-770967-0	172166-1	794186-1
			Duplex[2]	1-770967-1		
4	Dual Row	**.388** 9.86	Tin[1]	1-770968-0	172167-1	794188-1
			Duplex[2]	1-770968-1		
6	Dual Row	**.551** 14.00	Tin[1]	1-770969-0	172168-1	794190-1
			Duplex[2]	1-770969-1		
8	Dual Row	**.714** 18.14	Tin[1]	1-770970-0	770579-1	794192-1
			Duplex[2]	1-770970-1		
10	Dual Row	**.877** 22.28	Tin[1]	1-770971-0	770580-1	794196-1
			Duplex[2]	1-770971-1		
12	Dual Row	**1.040** 26.42	Tin[1]	1-770972-0	770581-1	794198-1
			Duplex[2]	1-770972-1		
14	Dual Row	**1.203** 30.56	Tin[1]	1-770973-0	770582-1	794202-1
			Duplex[2]	1-770973-1		
16	Dual Row	**1.366** 34.70	Tin[1]	1-770974-0	770583-1	794206-1
			Duplex[2]	1-770974-1		
18	Dual Row	**1.529** 38.84	Tin[1]	1-794105-0	770584-1	794208-1
			Duplex[2]	1-794105-1		
20	Dual Row	**1.692** 42.98	Tin[1]	1-794106-0	770585-1	794210-1
			Duplex[2]	1-794106-1		
22	Dual Row	**1.855** 47.12	Tin[1]	1-794107-0	770586-1	794212-1
			Duplex[2]	1-794107-1		
24	Dual Row	**2.018** 51.26	Tin[1]	1-794108-0	770587-1	794214-1
			Duplex[2]	1-794108-1		

[1]Tin Finish — Plated with .000150 [.00381] min. tin over .000050 [.00127] min. nickel underplate on entire contact.
[2]Duplex Finish — Plated with .000030 [.000762] min. gold in mating area and matte tin on solder tail end over .000050 [.00127] min. nickel underplate on entire contact.

Note: All part numbers are RoHS Compliant.

Catalog 82181
Revised 4-08

https://cwindustrial.co.za/

Dimensions are in inches and millimeters unless otherwise specified. Values in brackets are metric equivalents.

Dimensions are shown for reference purposes only. Specifications subject to change.

USA: 1-800-522-6752
Canada: 1-905-470-4425
Mexico: 01-800-733-8926
C. America: 52-55-1106-0803

South America: 55-11-2103-6000
Hong Kong: 852-2735-1628
Japan: 81-44-844-8013
UK: 44-8706-080-208

High Density Catalog.pdf 1 05/04/2022 14:58:28

Mini-Universal MATE-N-LOK 2 Connectors (Continued)

Recommended PC Board Hole Layouts for Vertical and Blindmate Headers

.062 [1.57] thick board, tolerances non-accumulative

Related Product Data

Vertical Headers—pages 103-104

2 and 3 Circuit, In-Line

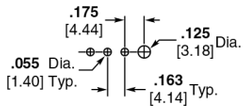

4, 6, 8, 10 and 12 Circuit, Dual Row

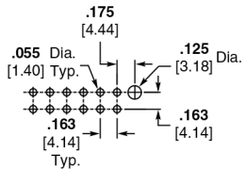

9, 12 and 15 Circuit, Matrix

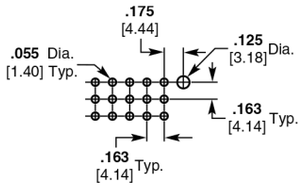

14, 16, 18, 20, 22 and 24 Circuit, Dual Row

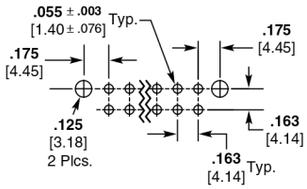

Recommended PC Board Hole Layouts for Right-Angle Headers

.062 [1.57] thick board, tolerances non-accumulative

Related Product Data

Right-Angle Headers—page 105

2 Circuit

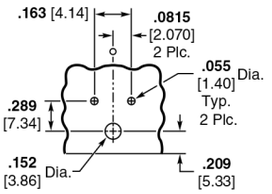

3 Circuit

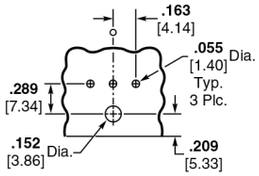

4, 8 and 12 Circuit

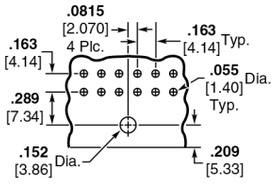

6 and 10 Circuit

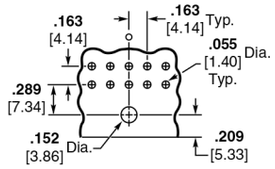

14 and 18 Circuit

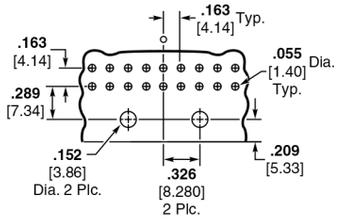

22 Circuit

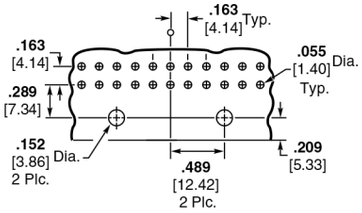

16, 20 and 24 Circuit

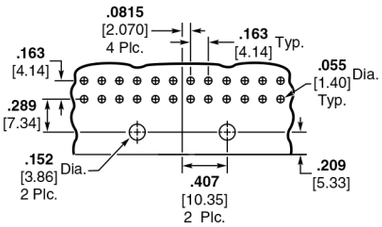

Catalog 82181
Revised 4-08

https://cwindustrial.co.za/

Dimensions are in inches and millimeters unless otherwise specified. Values in brackets are metric equivalents.

Dimensions are shown for reference purposes only. Specifications subject to change.

USA: 1-800-522-6752
Canada: 1-905-470-4425
Mexico: 01-800-733-8926
C. America: 52-55-1106-0803

South America: 55-11-2103-6000
Hong Kong: 852-2735-1628
Japan: 81-44-844-8013
UK: 44-8706-080-208

High Density Catalog.pdf 1 05/04/2022 14:58:46

Mini-Universal MATE-N-LOK 2 Connectors (Continued)

Mini-Universal MATE-N-LOK 2 Connector Mating Combinations

Connector Part Number				Mating Connector Part Number					
					PC Board Pin Headers[4]				
						Vertical			Right-Angle
Number of Circuits	Flammability Rating	Style	Plug[1] Housing Part No.	Cap[1] Housing Part No.	Plating	With Drain Holes	Without Drain Holes	Blindmate	Board Lock
2	UL94V-2	In-Line	794237-1	794238-1	—	—	—	—	—
	UL94V-0	In-Line	794184-1	794185-1	Tin[3]	1-770166-0	1-770872-0	—	1-770966-0
					Duplex[2]	1-770166-1	1-770872-1	—	1-770966-1
3	UL94V-2	In-Line	794239-1	794240-1	—	—	—	—	—
	UL94V-0	In-Line	794186-1	794187-1	Tin[3]	1-770170-0	1-770873-0	—	1-770967-0
					Duplex[2]	1-770170-1	1-770873-1	—	1-770967-1
4	UL94V-2	Dual Row	794241-1	794242-1	—	—	—	—	—
	UL94V-0	Dual Row	794188-1	794189-1	Tin[3]	1-770174-0	1-770874-0	1-794325-0	1-770968-0
					Duplex[2]	1-770174-1	1-770874-1	1-794325-1	1-770968-1
6	UL94V-2	Dual Row	794243-1	794244-1	—	—	—	—	—
	UL94V-0	Dual Row	794190-1	794191-1	Tin[3]	1-770178-0	1-770875-0	1-794326-0	1-770969-0
					Duplex[2]	1-770178-1	1-770875-1	1-794326-1	1-770969-1
8	UL94V-2	Dual Row	794245-1	794246-1	—	—	—	—	—
	UL94V-0	Dual Row	794192-1	794193-1	Tin[3]	1-794065-0	1-794073-0	1-794327-0	1-770970-0
					Duplex[2]	1-794065-1	1-794073-1	1-794327-1	1-770970-1
9	UL94V-2	Matrix	794247-1	794248-1	—	—	—	—	—
	UL94V-0	Matrix	794194-1	794195-1	Tin[3]	1-770182-0	1-770876-0	1-794432-0	—
					Duplex[2]	1-770182-1	1-770876-1	1-794432-1	—
10	UL94V-2	Dual Row	794249-1	794250-1	—	—	—	—	—
	UL94V-0	Dual Row	794196-1	794197-1	Tin[3]	1-770743-0	1-770858-0	1-794328-0	1-770971-0
					Duplex[2]	1-770743-1	1-770858-1	1-794328-1	1-770971-1
12	UL94V-2	Matrix	794253-1	794254-1	—	—	—	—	—
		Dual Row	794251-1	794252-1	—	—	—	—	—
	UL94V-0	Matrix	794200-1	794201-1	Tin[3]	1-770186-0	1-794040-0	1-794329-0	—
					Duplex[2]	1-770186-1	1-794040-1	1-794329-1	—
		Dual Row	794198-1	794199-1	Tin[3]	1-794066-0	1-770621-0	—	1-770972-0
					Duplex[2]	1-794066-1	1-770621-1	—	1-770972-1
14	UL94V-2	Dual Row	794255-1	794256-1	—	—	—	—	—
	UL94V-0	Dual Row	794202-1	794203-1	Tin[3]	1-794067-0	1-794074-0	—	1-770973-0
					Duplex[2]	1-794067-1	1-794074-1	—	1-770973-1
15	UL94V-2	Matrix	794257-1	794258-1	—	—	—	—	—
	UL94V-0	Matrix	794204-1	794205-1	Tin[3]	1-770190-0	1-770859-0	1-794330-0	—
					Duplex[2]	1-770190-1	1-770859-1	1-794330-1	—
16	UL94V-2	Dual Row	794259-1	794260-1	—	—	—	—	—
	UL94V-0	Dual Row	794206-1	794207-1	Tin[3]	1-794068-0	1-794075-0	—	1-770974-0
					Duplex[2]	1-794068-1	1-794075-1	—	1-770974-1
18	UL94V-2	Dual Row	794261-1	794262-1	—	—	—	—	—
	UL94V-0	Dual Row	794208-1	794209-1	Tin[3]	1-794069-0	1-794076-0	—	1-794105-0
					Duplex[2]	1-794069-1	1-794076-1	—	1-794105-1
20	UL94V-2	Dual Row	794263-1	794264-1	—	—	—	—	—
	UL94V-0	Dual Row	794210-1	794211-1	Tin[3]	1-794070-0	1-794077-0	—	1-794106-0
					Duplex[2]	1-794070-1	1-794077-1	—	1-794106-1
22	UL94V-2	Dual Row	794265-1	794266-1	—	—	—	—	—
	UL94V-0	Dual Row	794212-1	794213-1	Tin[3]	1-794071-0	1-794078-0	—	1-794107-0
					Duplex[2]	1-794071-1	1-794078-1	—	1-794107-1
24	UL94V-2	Dual Row	794267-1	794268-1	—	—	—	—	—
	UL94V-0	Dual Row	794214-1	794215-1	Tin[3]	1-794072-0	1-794079-0	—	1-794108-0
					Duplex[2]	1-794072-1	1-794079-1	—	1-794108-1

[1]Mini-Universal MATE-N-LOK 2 plug and cap housings accept pin or socket contacts. Use the appropriate contacts in the plug housing as required by the mating connector. All **Plugs** and **Caps** are **free-hanging**.
[2]Duplex Finish — Plated with .000030 [.000762] min. gold in mating area and matte tin on solder tail end over .000050 [.00127] min. nickel underplate on entire contact.
[3]Tin Finish — Plated with .000150 [.00381] min. tin over .000050 [.00127] min nickel underplate on entire contact.
[4]All PC Board pin headers have 94V-0 flammability rating and can mate to V-0 or V-2 plug housings.

Note: **All part numbers are RoHS Compliant.**

Catalog 82181
Revised 4-08
https://cwindustrial.co.za/

Dimensions are in inches and millimeters unless otherwise specified. Values in brackets are metric equivalents.

Dimensions are shown for reference purposes only. Specifications subject to change.

USA: 1-800-522-6752
Canada: 1-905-470-4425
Mexico: 01-800-733-8926
C. America: 52-55-1106-0803
South America: 55-11-2103-6000
Hong Kong: 852-2735-1628
Japan: 81-44-844-8013
UK: 44-8706-080-208

High Density Catalog.pdf 1 05/04/2022 14:59:04

Engineering Notes

Catalog 82181
Revised 4-08

https://cwindustrial.co.za/

Dimensions are in inches and millimeters unless otherwise specified. Values in brackets are metric equivalents.

Dimensions are shown for reference purposes only. Specifications subject to change.

USA: 1-800-522-6752
Canada: 1-905-470-4425
Mexico: 01-800-733-8926
C. America: 52-55-1106-0803

South America: 55-11-2103-6000
Hong Kong: 852-2735-1628
Japan: 81-44-844-8013
UK: 44-8706-080-208

High Density Catalog.pdf 1 05/04/2022 14:59:22

(MR) Miniature Rectangular Connectors

Product Facts

- Housings positively lock to help prevent accidental disengagement
- Either cap or plug housing can be mounted in same rectangular panel cutout without additional hardware
- UL94V-0 housings
- Plug and cap design includes molded-in polarizing feature for proper mating
- Numbered cavities for easy circuit identification
- Egg crate design of plug half fully encloses socket contacts, reducing shock hazard
- Molded skirt extension on cap protects pin contacts
- Strain reliefs for 6 through 36 positions are available
- Choice of tin or gold plated contacts
- Not for interrupting current
- Socket solder tail contacts available for hot side PC Board mounting
- High density achieved through .165 [4.19] contact centerline spacing
- Extraction tool removes both pins and sockets
- Contacts accept 26-18 AWG [.12-.8 mm^2] wire sizes and insulation diameters of .025-.115 [.635-2.92]
- Same applicator crimps pins and sockets
- Vertical PC Board pin headers are available
- Pin header standoffs on housings at board interface facilitates gas venting and cooling during soldering
- Recognized under the Component Program of Underwriters Laboratories Inc., File No. E28476
- Certified by Canadian Standards Association, File No. LR 7189

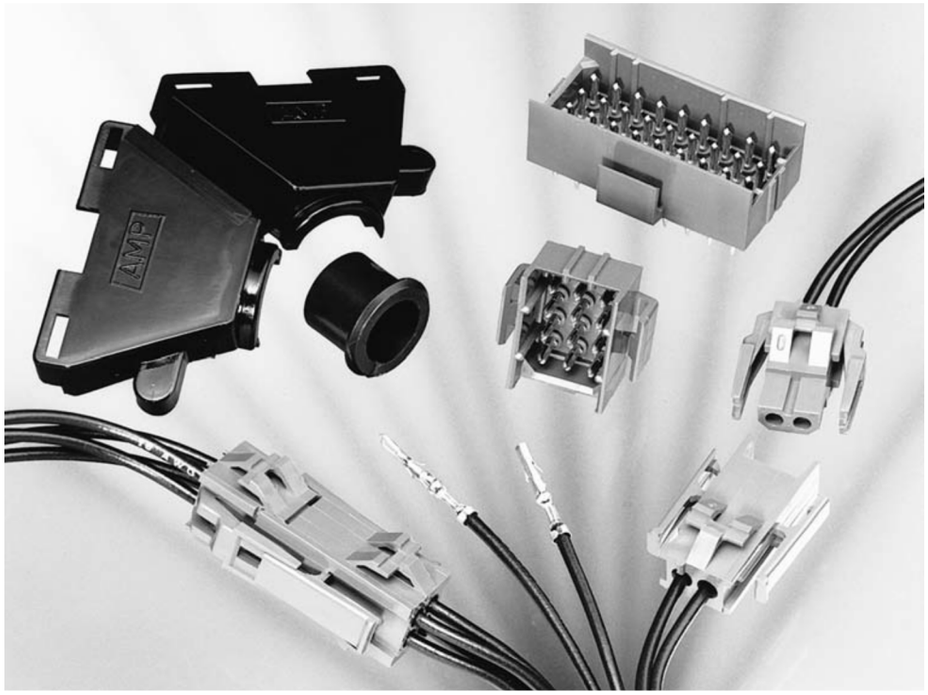

Performance Characteristics

The Miniature Rectangular Connector performance characteristics found on pages 109-110 are based on free-hanging and panel mount connectors, loaded with contacts crimped on stranded wire.

Dielectric Withstanding Voltage
2.5 KVAC between adjacent circuits

Insulation Resistance—
1500 megohms minimum initial between adjacent circuits

Voltage Rating—250 V AC

Connector Mating—
Split Pin—1.0 lb. max. per circuit

Connector Unmating—
Split Pin—.25 lb. min. per circuit

Contact Insertion Force—
1.75 lb. max. per contact

Contact Retention—10 lb. min. per contact

Durability—25 cycles, mating and unmating

Technical Documents

Product Specifications

108-1022 (MR) Miniature Rectangular Connectors

108-1078 (MR) Miniature Rectangular Headers

Application Specification

114-1014 (MR) Miniature Rectangular Contacts

Instruction Sheet

408-3231 Pin, Socket, Housing, Contacts, and Accessories

Catalog 82181
Revised 4-08

https://cwindustrial.co.za/

Dimensions are in inches and millimeters unless otherwise specified. Values in brackets are metric equivalents.

Dimensions are shown for reference purposes only. Specifications subject to change.

USA: 1-800-522-6752
Canada: 1-905-470-4425
Mexico: 01-800-733-8926
C. America: 52-55-1106-0803

South America: 55-11-2103-6000
Hong Kong: 852-2735-1628
Japan: 81-44-844-8013
UK: 44-8706-080-208

High Density Catalog.pdf 1 05/04/2022 14:59:38

(MR) Miniature Rectangular Connectors (Continued)

Performance Characteristics
(Continued)

Maximum Current—Maximum current rating of Miniature Rectangular connectors is limited by the maximum operating temperature of the housings which is 105°C including the temperature rise of the contacts which is a maximum of 30°C. There are several variables which have a direct effect on this maximum current-carrying capability for a given connector and must be considered for each application. These variables are:

Wire Size—Larger diameter wire will carry more current since it has less internal resistance to current flow and thus generates less heat. Longer wire lengths also enhance current-carrying capabilities since the wire conducts heat away from the connector.

Connector Size—In general, the more circuits in a connector, the less current can be carried.

Ambient Temperature—The higher the ambient temperature, the less current can be carried in any given connector.

Printed Wiring Board Conductor Size—The finished trace conductor width and thickness should be maximized to allow for the greatest current-carrying capacity and heat dissipation.

Miniature Rectangular connectors also will withstand the following tests:

Vibration—10-55-10 cycles per minute at .06 inch total excursion

Physical Shock—18 drops, 50 G sawtooth at 10 milliseconds

Housing Panel Retention—50 lb. min.

Housing Lock Strength—20 lb. min.

Thermal Shock— -55°C to +85°C

Temperature-Humidity Cycling—25°C to 65°C at 95 RH

Corrosion—48 hr. at 5% salt concentration

Related Product Data

Product Specifications

108-1022 (MR) Miniature Rectangular Connectors

108-1078 (MR) Miniature Rectangular Headers

Current Rating Verification for 30°C Maximum Temperature Rise 100% Energized

Wire-to-Wire
MR Calculated Current Table

Number of Circuits	Wire Gauge				
	18	20	22	24	26
2	9.00	8.00	6.50	5.50	5.00
3	8.50	7.00	6.00	5.00	4.50
4	7.00	6.50	5.50	5.00	4.00
6	6.00	6.00	5.00	4.00	4.00
9	5.00	5.00	4.00	4.00	3.50
12	4.50	4.50	4.00	3.50	3.00
15	4.50	4.00	3.50	3.00	2.50
20	4.00	4.00	3.50	3.00	2.50
24	4.00	3.50	3.00	2.50	2.00
36	3.50	3.00	2.50	2.00	2.00

Values are based on initial Temperature Rise versus Current Testing and are intended to be a guide in the selection of a connector family. All applications should be tested by the end user. The values listed are per circuit for fully loaded housings being 100% energized. **Note:** All combinations were not tested and this chart contains interpolated and extrapolated values.

Minimum Wire Lengths for T-Rise vs. Current Testing

AWG	Min. Length (in.)	AWG	Min. Length (in.)
30	2.6	18	9.4
28	3.2	16	11.3
26	4.1	14	13.7
24	5.1	12	16.4
20	7.8	10	19.3

Note: If wire lengths used are less than those listed above, the current-carrying ability of the system will be reduced due to less heat being conducted away from the connector. The customer should fully test all applications.

Wire-to-Board

Due to the vast differences in trace geometry and printed circuit board configurations, we are unable to provide a separate current carrying chart for our printed circuit board header products. However, the above Wire-to-Wire charts may be used as a guideline for headers if the trace width and thickness is equal to the listed wire gauge. For vertical headers, only 95% of the Wire-to-Wire value should be used. For right-angle headers, only 75% of the Wire-to-Wire value should be used. The charted values are only a tool for connector selection and will require the customer to fully test their application.

Termination Resistance/Contact Crimp Tensile Force

Wire Size		Termination Resistance		Contact Crimp Tensile Force	
AWG	mm²	Test Current (Amps)	Resistance Milliohms (Max. Init.)	Force (Min.) lbs.	Force (Min.) N
26	.12	1	5.00	5	22
24	.2	1.5	5.00	8	36
22	.3	3	4.50	14	62
20	.5	4.5	4.00	14	62
18	.8	6	4.00	30	133

Note: This is the total resistance between wire crimps of a mated pin and socket.

Catalog 82181
Revised 4-08

https://cwindustrial.co.za/

Dimensions are in inches and millimeters unless otherwise specified. Values in brackets are metric equivalents.

Dimensions are shown for reference purposes only. Specifications subject to change.

USA: 1-800-522-6752
Canada: 1-905-470-4425
Mexico: 01-800-733-8926
C. America: 52-55-1106-0803

South America: 55-11-2103-6000
Hong Kong: 852-2735-1628
Japan: 81-44-844-8013
UK: 44-8706-080-208

High Density Catalog.pdf 1 05/04/2022 14:59:57

(MR) Miniature Rectangular Connectors (Continued)

(MR) Miniature Rectangular Connector Mating Combinations

Connector Part Number				Mating Connector Part Number			
Number of Circuits	Flammability Rating	Style	Pin Housing (Cap) Part No.	Socket Housing (Plug) Part No.	PC Board Vertical Pin Headers		
					Plating	.062 Board	.120 Board
2	UL94V-0	In-Line	1-640507-0	1-640517-0	Tin	640497-1	640497-3
					Duplex[1]	2-640497-2	2-640497-4
3	UL94V-0	In-Line	1-640508-0	1-640518-0	Tin	640498-1	640498-3
					Duplex[1]	2-640498-2	2-640498-4
4	UL94V-0	Matrix	1-640509-0	1-640519-0	Tin	640499-1	640499-3
					Duplex[1]	2-640499-2	2-640499-4
6	UL94V-0	Matrix	1-640510-0	1-640520-0	Tin	640500-1	640500-3
					Duplex[1]	2-640500-2	2-640500-4
9	UL94V-0	Matrix	1-640511-0	1-640521-0	Tin	640501-1	640501-3
					Duplex[1]	2-640501-2	2-640501-4
12	UL94V-0	Matrix	1-640512-0	1-640522-0	Tin	640502-1	640502-3
					Duplex[1]	2-640502-2	2-640502-4
15	UL94V-0	Matrix	1-640513-0	1-640523-0	Tin	640503-1	640503-3
					Duplex[1]	2-640503-2	2-640503-4
20	UL94V-0	Matrix	1-640514-0	1-640524-0	Tin	640504-1	640504-3
					Duplex[1]	2-640504-2	2-640504-4
24	UL94V-0	Matrix	1-640515-0	1-640525-0	Tin	640505-1	640505-3
					Duplex[1]	2-640505-2	2-640505-4
36	UL94V-0	Matrix	1-640516-0	1-640526-0	Tin	640506-1	640506-3
					Duplex[1]	2-640506-2	2-640506-4

[1]Duplex Finish — Plated with .000030 [.000762] min. gold in mating area, matte tin on solder tail end over .000050 [.00127] min. nickel underplate on entire contact.

Note: **All part numbers are RoHS Compliant.**

Catalog 82181
Revised 4-08

https://cwindustrial.co.za/

Dimensions are in inches and millimeters unless otherwise specified. Values in brackets are metric equivalents.

Dimensions are shown for reference purposes only. Specifications subject to change.

USA: 1-800-522-6752
Canada: 1-905-470-4425
Mexico: 01-800-733-8926
C. America: 52-55-1106-0803
South America: 55-11-2103-6000
Hong Kong: 852-2735-1628
Japan: 81-44-844-8013
UK: 44-8706-080-208

High Density Catalog.pdf 1 05/04/2022 15:00:14

(MR) Miniature Rectangular Connectors (Continued)

Contacts

Pin diameter .068 [1.73]

Material

Phosphor bronze
Stock thickness .008 [.203]

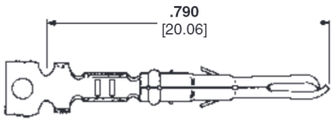

Live Split Pin

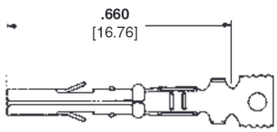

Standard Socket

Wire Size Range AWG [mm²]	Ins. Dia. Range	Finish	Contact Part Numbers				HDM Applicator Part No.	Hand Tool Part No.
			Live Split Pin		Standard Socket			
			Strip Form	Loose Piece	Strip Form	Loose Piece		
26-24 [.12-.2]	**.025-.050** .635-1.27	Pre-tin	350968-1	640579-1	794000-1	794001-1	466352-1[3] 466352-2[3] 466352-3[3]	91534-1
		Select Gold[1]	350968-2	640579-2	794000-2	794001-2		
26-18[2] [.12-.8]	**.050-.115** 1.27-2.92	Pre-tin	350967-1	640545-1	641294-1	641300-1	466351-1[3] 466351-2[3] 466351-4[3]	91526-1
		Select Gold[1]	350967-2	640545-2	641294-2	641300-2		

[1]Select Gold Finish — Plated with .000030 min. [.000762] gold in mating area over .000050 [.00127] min. nickel underplate on entire contact.
[2]1650 CMA maximum.
[3]HDM Applicator part number ending in -1 is used on AMPOMATOR CLS Machine with T or G Terminators, -2 is used on AMP-O-LECTRIC Model K Machine, -3 or -4 is used on AMP-O-LECTRIC Model G Machine. See pages 207-210 for further information.

Grounding Pins

(Mate first, break last, not for interrupting current)

Pin diameter .068 [1.73]
Stock thickness .008 [.203]

Material

Phosphor bronze

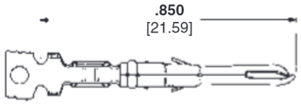

Wire Size Range AWG [mm²]	Ins. Dia. Range	Finish	Grounding Pin Part Numbers		HDM Applicator Part No.	Hand Tool Part No.
			Strip Form	Loose Piece		
26-18[2] [.12-.8]	**.050-.115** 1.27-2.92	Pre-tin	350969-1	640580-1	466351-1[3] 466351-2[3] 466351-4[3]	91526-1
		Select Gold[1]	350969-2	640580-2		

[1]Select Gold Finish—Plated with .000030 [.000762] min. gold in mating area over .000050 [.00127] min. nickel underplate on entire contact.
[2]1650 CMA maximum.
[3]HDM Applicator part number ending in -1 is used on AMPOMATOR CLS Machine with T or G Terminators, -2 is used on AMP-O-LECTRIC Model K Machine, -3 or -4 is used on AMP-O-LECTRIC Model G Machine. See pages 207-210 for further information.

Solder Tail Socket

Material and Finish

Phosphor bronze, pre-tin
Stock thickness .008 [.203]

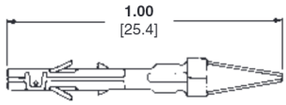

Part Number 350838-1
Note: Recommended for use with MR Socket Housings

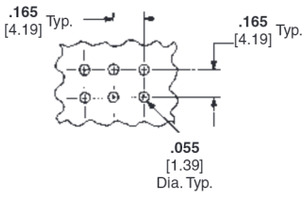

Recommended PC Board Hole Layout
.062 [1.57] or .093 [2.36] thick board

Keying Plug

IS 408-3231



Part Number 350591-1
UL94V-0 Nylon material
Note: Use in socket housings only.

Related Product Data

Product Specification
108-1022 (MR) Miniature Rectangular Connectors

Application Specification
114-1014 (MR) Miniature Rectangular Contacts

Performance Characteristics—pages 109-110
Housings—pages 113-114
Technical Documents—pages 109 and 205-206
Application Tooling—pages 207-210



Contact Extraction Tool
Part No. 455822-2
IS 408-9570



Contact Insertion Tool
(For inserting contacts applied to small diameter wire)
Part No. 455830-1
IS 408-7984

Note: All part numbers are RoHS Compliant.

Catalog 82181
Revised 4-08

https://cwindustrial.co.za/

Dimensions are in inches and millimeters unless otherwise specified. Values in brackets are metric equivalents.

Dimensions are shown for reference purposes only. Specifications subject to change.

USA: 1-800-522-6752
Canada: 1-905-470-4425
Mexico: 01-800-733-8926
C. America: 52-55-1106-0803
South America: 55-11-2103-6000
Hong Kong: 852-2735-1628
Japan: 81-44-844-8013
UK: 44-8706-080-208

High Density Catalog.pdf 1 05/04/2022 15:00:37

(MR) Miniature Rectangular Connectors (Continued)

Housings

Free-Hanging or Panel Mount

.165 [4.19] Centerline spacing

Material

Nylon, Natural (Color—Brick Red)

Flammability Rating—UL94V-0

Related Product Data

Product Specification

108-1022 (MR) Miniature Rectangular Connectors

Performance Characteristics—pages 109-110
Panel Cutout Recommendations—page 115
Contacts—page 112
Keying Plug—page 112
Strain Reliefs—page 116
Commoning Bars—page 116
Technical Documents—pages 109 and 205-206
Mating Headers—pages 117-118

2 and 3 Circuit, In-Line

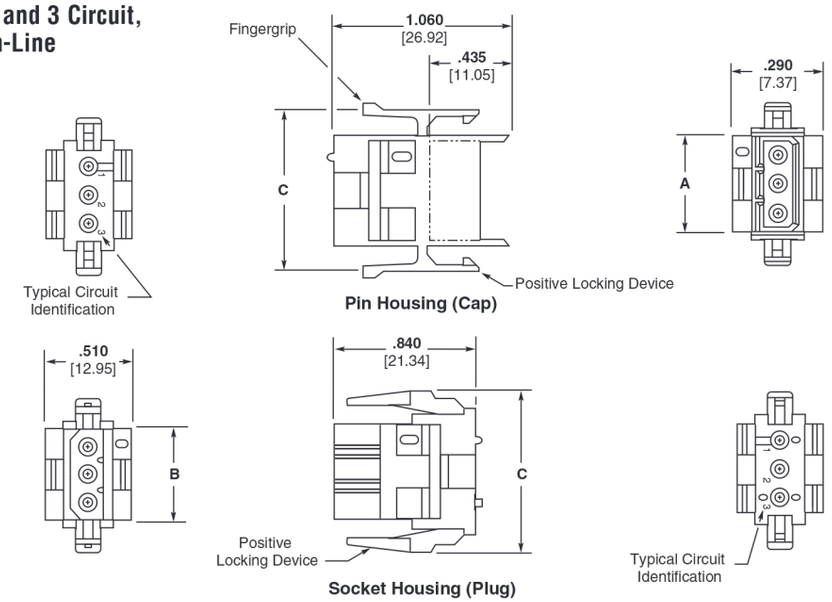

Number of Circuits	Dimensions			Part Numbers	
	A	B	C	Pin Housing (Cap)	Socket Housing (Plug)
2	**.455** 11.56	**.365** 9.27	**.755** 19.18	1-640507-0	1-640517-0
3	**.620** 15.75	**.530** 13.46	**.920** 23.37	1-640508-0	1-640518-0

Note: **All part numbers are RoHS Compliant.**

4 and 6 Circuit, Matrix

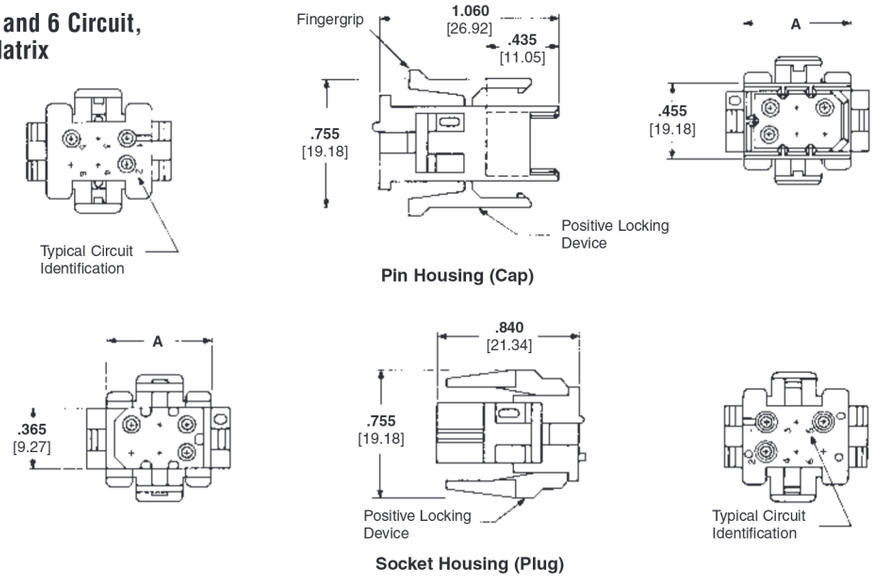

Number of Circuits	A Dim.	Part Numbers	
		Pin Housing (Cap)	Socket Housing (Plug)
4	**.455** 11.56	1-640509-0	1-640519-0
6	**.620** 15.75	1-640510-0	1-640520-0

Note: **All part numbers are RoHS Compliant.**

Catalog 82181
Revised 4-08

https://cwindustrial.co.za/

Dimensions are in inches and millimeters unless otherwise specified. Values in brackets are metric equivalents.

Dimensions are shown for reference purposes only. Specifications subject to change.

USA: 1-800-522-6752
Canada: 1-905-470-4425
Mexico: 01-800-733-8926
C. America: 52-55-1106-0803

South America: 55-11-2103-6000
Hong Kong: 852-2735-1628
Japan: 81-44-844-8013
UK: 44-8706-080-208

High Density Catalog.pdf 1 05/04/2022 15:01:03

(MR) Miniature Rectangular Connectors (Continued)

Housings

Free-Hanging or Panel Mount

.165 [4.19] Centerline spacing

Material

Nylon, Natural (Color—Brick Red)

Flammability Rating—UL94V-0

Related Product Data

Product Specification

108-1022 (MR) Miniature Rectangular Connectors

Performance Characteristics—pages 109-110
Panel Cutout Recommendations—page 115
Contacts—page 112
Keying Plug—page 112
Strain Reliefs—page 116
Commoning Bars—page 116
Technical Documents—pages 109 and 205-206
Mating Headers—pages 117-118

9, 12 and 15 Circuit, Matrix

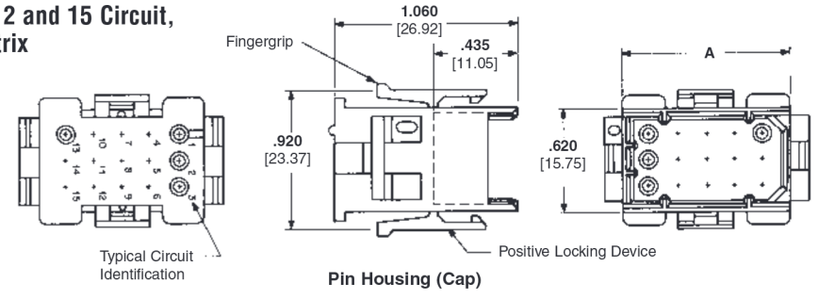

Pin Housing (Cap)

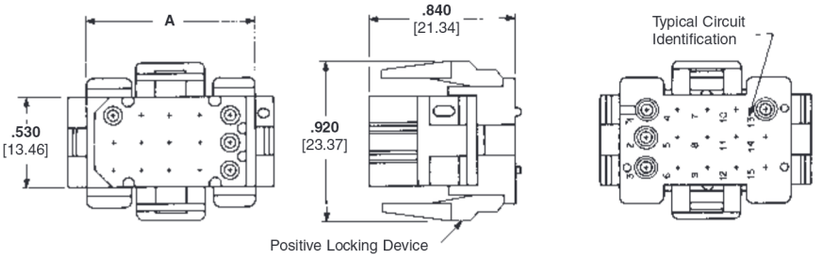

Socket Housing (Plug)

20, 24 and 36 Circuit, Matrix

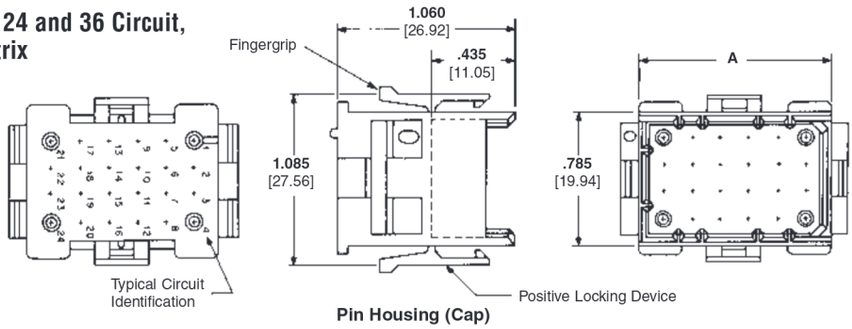

Pin Housing (Cap)

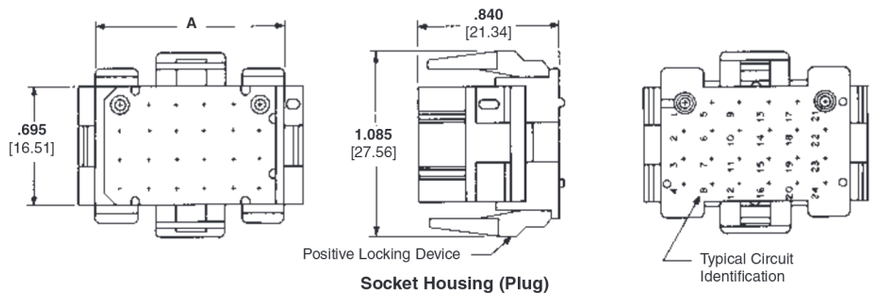

Socket Housing (Plug)

Number of Circuits	A Dim.	Part Numbers	
		Pin Housing (Cap)	Socket Housing (Plug)
9	**.620** [15.75]	1-640511-0	1-640521-0
12	**.785** [19.94]	1-640512-0	1-640522-0
15	**.950** [24.13]	1-640513-0	1-640523-0
20	**.950** [24.13]	1-640514-0	1-640524-0
24	**1.115** [28.32]	1-640515-0	1-640525-0
36	**1.610** [40.89]	1-640516-0	1-640526-0

Note: All part numbers are RoHS Compliant.

Catalog 82181
Revised 4-08

https://cwindustrial.co.za/

Dimensions are in inches and millimeters unless otherwise specified. Values in brackets are metric equivalents.

Dimensions are shown for reference purposes only. Specifications subject to change.

USA: 1-800-522-6752
Canada: 1-905-470-4425
Mexico: 01-800-733-8926
C. America: 52-55-1106-0803

South America: 55-11-2103-6000
Hong Kong: 852-2735-1628
Japan: 81-44-844-8013
UK: 44-8706-080-208

High Density Catalog.pdf 1 05/04/2022 15:01:22

(MR) Miniature Rectangular Connectors (Continued)

Recommended Panel Cutouts for Pin and Socket Housings

Related Product Data

Product Specification

108-1022 (MR) Miniature Rectangular Connectors

Housings—pages 113-114
Technical Documents—pages 109 and 205-206

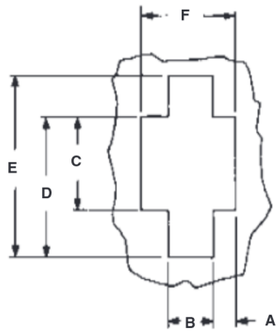

View is from housing entry side

Panel Thickness .068 [1.75] Max.

Number of Circuits	Panel Cutout Dimensions					
	A	B	C	D	E	F
2	**.105** 2.67	**.220** 5.59	**.475** 12.07	**.630** 16.00	**.785** 19.94	**.430** 10.92
3	**.105** 2.67	**.220** 5.59	**.640** 16.26	**.795** 20.19	**.950** 24.13	**.430** 10.92
4	**.157** 3.99	**.280** 5.28	**.475** 12.07	**.630** 16.00	**.785** 19.94	**.595** 15.11
6	**.208** 5.28	**.345** 8.76	**.475** 12.07	**.630** 16.00	**.785** 19.94	**.760** 19.30
9	**.208** 5.28	**.345** 8.76	**.640** 16.26	**.795** 20.19	**.950** 24.13	**.760** 19.30
12	**.225** 5.72	**.475** 12.07	**.640** 16.26	**.795** 20.19	**.950** 24.13	**.925** 23.50
15	**.308** 7.82	**.475** 12.07	**.640** 16.26	**.795** 20.19	**.950** 24.13	**1.090** 27.69
20	**.308** 7.82	**.475** 12.07	**.805** 20.45	**.960** 24.38	**1.115** 28.32	**1.090** 27.69
24	**.390** 9.91	**.475** 12.07	**.805** 20.45	**.960** 24.38	**1.115** 28.32	**1.255** 31.88
36	**.625** 15.86	**.500** 12.70	**.800** 20.32	**.950** 24.13	**1.100** 27.94	**1.750** 44.45

Notes:
1. When mounted in a .060 [1.52] thick panel, the cap's mating end extends .800 [20.32] beyond the panel front; wire end extends .220 [55.88] from the panel rear. Plug mating end extends .580 [14.73] beyond the panel front; wire end extends .220 [55.88] from the panel rear.
2. The panel should be punched so that the housing enters the panel in the same direction as the punch for ease of assembly.

Catalog 82181
Revised 4-08

https://cwindustrial.co.za/

Dimensions are in inches and millimeters unless otherwise specified. Values in brackets are metric equivalents.

Dimensions are shown for reference purposes only. Specifications subject to change.

USA: 1-800-522-6752
Canada: 1-905-470-4425
Mexico: 01-800-733-8926
C. America: 52-55-1106-0803

South America: 55-11-2103-6000
Hong Kong: 852-2735-1628
Japan: 81-44-844-8013
UK: 44-8706-080-208

High Density Catalog.pdf 1 05/04/2022 15:01:44

(MR) Miniature Rectangular Connectors (Continued)

Strain Reliefs
One Piece — Clam Shell
(Illustrated in closed position)
IS 408-3231

Material
Nylon, Natural (Color—Brick Red)

Flammability Rating—UL94V-0

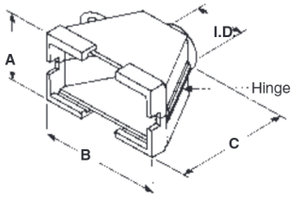

6, 9, 12, 15 and 20 Circuit

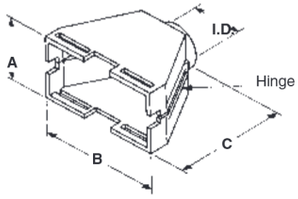

24 and 36 Circuit

Number of Circuits	Dimensions				Part Numbers
	I.D.	A	B	C	
6	**.374** 9.50	**.634** 16.10	**.760** 19.30	**1.000** 25.4	350373-1
9	**.420** 10.67	**.800** 20.32	**.760** 19.30	**1.000** 25.4	350522-1
12	**.420** 10.67	**.790** 20.07	**.925** 23.50	**1.000** 25.4	350374-1
15	**.420** 10.67	**.790** 20.07	**1.090** 27.69	**1.000** 25.4	350523-1
20	**.560** 14.22	**.960** 24.38	**1.090** 27.69	**1.280** 23.51	480634-1
24	**.560** 14.22	**.900** 22.86	**1.255** 31.88	**1.280** 23.51	350524-1
36	**.560** 14.22	**.900** 22.86	**1.750** 44.45	**1.280** 23.51	480594-1

Notes:
1. These strain reliefs can be used with either pin or socket housings.
2. **Customer supplied:** One No. 6 Panhead Type B self-taping screw, 3/8 long. Plating is optional to conform to customer requirements.
3. Strain reliefs are also available in UL94V-2 nylon, black in color. To order strain reliefs in this material use the appropriate dash numbers: 1-XXXXXX-9.

Strain Relief
Adapting Grommets
IS 408-3231

Material
Flexible PVC (55/75 Durometer) black color

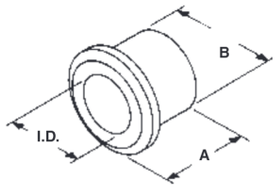

Number of Circuits	Dimensions			Part Numbers
	I.D.	A	B	
6	**.156** 3.96	**.375** 9.53	**.375** 9.53	2-350377-0
	.218 5.54	**.375** 9.53	**.375** 9.53	2-350376-0
	.296 7.52	**.375** 9.53	**.375** 9.53	2-350375-0
9, 12 & 15	**.218** 5.54	**.375** 9.53	**.420** 10.67	2-350378-1
	.250 6.35	**.375** 9.53	**.420** 10.67	2-350379-1
	.281 7.14	**.375** 9.53	**.420** 10.67	2-350380-1
20, 24 & 36	**.437** 11.10	**.500** 12.70	**.562** 14.27	2-380935-0
	.375 9.53	**.500** 12.70	**.562** 14.27	2-380936-0
	.312 7.92	**.500** 12.70	**.562** 14.27	2-380937-0

Commoning Bars
IS 408-3231

Material
Brass
Stock thickness .008 [.203]

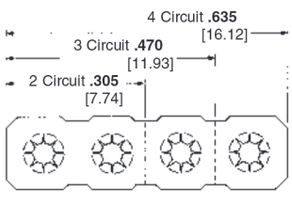

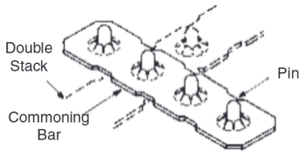

Finish	Part Numbers		
	2 Circuit	3 Circuit	4 Circuit
Pre-tin	350020-1	350021-1	350022-1
Gold[1]	350020-2	350021-2	350022-2

[1]Gold Finish—Plated with .000030 [.000762] min. gold over .000050 [.00127] min. nickel underplate on entire contact.

Related Product Data
Housings—pages 113-114

Notes:
1. Commoning bars can be used to common adjacent pin contacts in any column or row. Maximum stack per pin is two.
2. The above illustrates the proper insertion of the Commoning Bar.
3. Use the mating socket housing to assemble the Commoning Bar onto the pins.



Commoning Bar Extraction Tool
Part No. 457306-1
IS 408-3231

Note: **All part numbers are RoHS Compliant.**

Catalog 82181
Revised 4-08

https://cwindustrial.co.za/

Dimensions are in inches and millimeters unless otherwise specified. Values in brackets are metric equivalents.

Dimensions are shown for reference purposes only. Specifications subject to change.

USA: 1-800-522-6752
Canada: 1-905-470-4425
Mexico: 01-800-733-8926
C. America: 52-55-1106-0803

South America: 55-11-2103-6000
Hong Kong: 852-2735-1628
Japan: 81-44-844-8013
UK: 44-8706-080-208

High Density Catalog.pdf 1 05/04/2022 15:02:48

(MR) Miniature Rectangular Connectors (Continued)

PC Board Vertical Pin Headers

.165 [4.19] Centerline spacing

Material

Housing — Nylon, Natural (Color—Brick Red)

Flammability Rating — UL94V-0

Contacts — Phosphor bronze

Solder tail diameter .040 [1.02]

Related Product Data

Product Specification

108-1078 (MR) Miniature Rectangular Headers

Dimensions A and B — page 118
Performance Characteristics— pages 109-110
Technical Documents— pages 109 and 205-206
Mating Socket Housings— pages 113-114

2 and 3 Circuit, In-Line

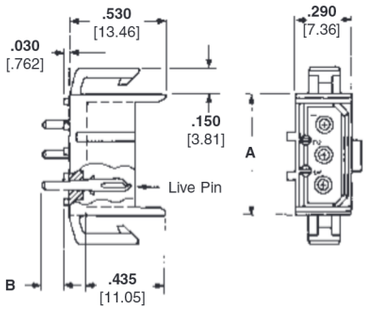

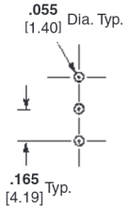

Recommended PC Board Hole Layout

4 and 6 Circuit, Matrix

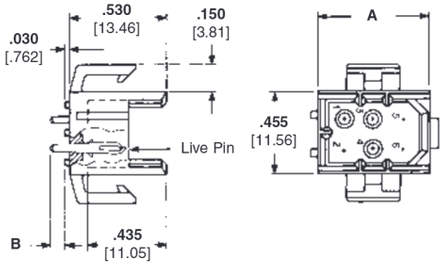

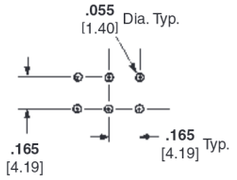

Recommended PC Board Hole Layout

9, 12 and 15 Circuit, Matrix

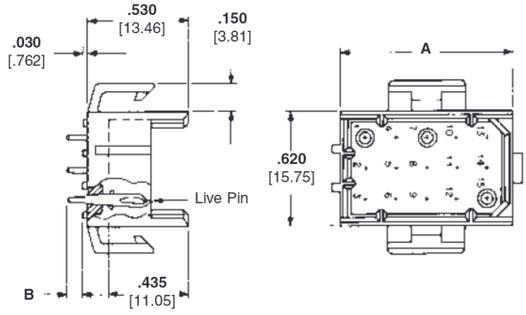

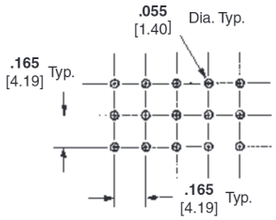

Recommended PC Board Hole Layout

Catalog 82181
Revised 4-08

https://cwindustrial.co.za/

Dimensions are in inches and millimeters unless otherwise specified. Values in brackets are metric equivalents.

Dimensions are shown for reference purposes only. Specifications subject to change.

USA: 1-800-522-6752
Canada: 1-905-470-4425
Mexico: 01-800-733-8926
C. America: 52-55-1106-0803

South America: 55-11-2103-6000
Hong Kong: 852-2735-1628
Japan: 81-44-844-8013
UK: 44-8706-080-208

High Density Catalog.pdf 1 05/04/2022 15:03:13

(MR) Miniature Rectangular Connectors (Continued)

PC Board Vertical Pin Headers

.165 [4.19] Centerline spacing

Material

Housing — Nylon, Natural (Color–Brick Red)

Flammability Rating — UL94V-0

Contacts — Phosphor bronze

Solder tail diameter .040 [1.02]

Related Product Data

Product Specification

108-1078 (MR) Miniature Rectangular Headers

Dimensions (2 and 3 Circuit, In-Line; 4, 6, 9, 12 and 15 Circuit, Matrix) — page 118

Performance Characteristics—pages 109-110

Vertical Pin Headers and Recommended PC Board Hole Layouts—pages 117-118

Technical Documents—pages 109 and 205-206

Mating Socket Housings—pages 113-114

20, 24 and 36 Circuit, Matrix

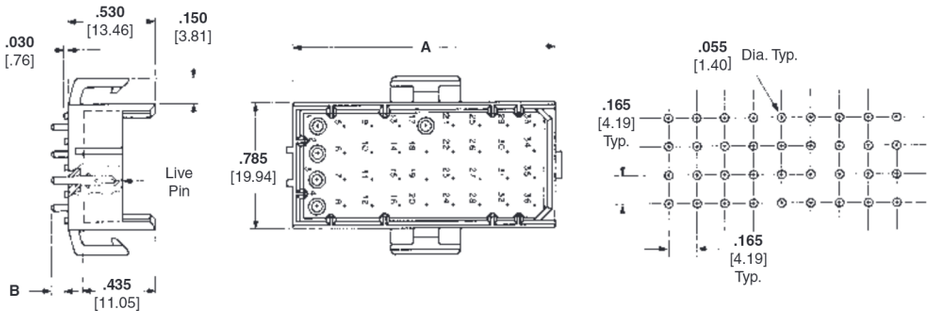

Recommended PC Board Hole Layout

Number of Circuits	Board Thickness	Dimensions A	Dimensions B	Header Part Numbers Tin Finish	Header Part Numbers Duplex Finish[1]	Mates with Socket Housing Part No.
2 In-Line	**.062** 1.57	**.455** 11.56	**.120** 3.05	640497-1	2-640497-2	1-640517-0
	.120 3.05	**.455** 11.56	**.180** 4.57	640497-3	2-640497-4	
3 In-Line	**.062** 1.57	**.620** 15.75	**.120** 3.05	640498-1	2-640498-2	1-640518-0
	.120 3.05	**.620** 15.75	**.180** 4.57	640498-3	2-640498-4	
4	**.062** 1.57	**.455** 11.56	**.120** 3.05	640499-1	2-640499-2	1-640519-0
	.120 3.05	**.455** 11.55	**.180** 4.57	640499-3	2-640499-4	
6	**.062** 1.57	**.620** 15.75	**.120** 3.05	640500-1	2-640500-2	1-640520-0
	.120 3.05	**.620** 15.75	**.180** 4.57	640500-3	2-640500-4	
9	**.062** 1.57	**.620** 15.75	**.120** 3.05	640501-1	2-640501-2	1-640521-0
	.120 3.05	**.620** 15.75	**.180** 4.57	640501-3	2-640501-4	
12	**.062** 1.57	**.785** 19.94	**.120** 3.05	640502-1	2-640502-2	1-640522-0
	.120 3.05	**.785** 19.94	**.180** 4.57	640502-3	2-640502-4	
15	**.062** 1.57	**.950** 24.13	**.120** 3.05	640503-1	2-640503-2	1-640523-0
	.120 3.05	**.950** 24.13	**.180** 4.57	640503-3	2-640503-4	
20	**.062** 1.57	**.950** 24.13	**.120** 3.05	640504-1	2-640504-2	1-640524-0
	.120 3.05	**.950** 24.13	**.180** 4.57	640504-3	2-640504-4	
24	**.062** 1.57	**1.115** 28.32	**.120** 3.05	640505-1	2-640505-2	1-640525-0
	.120 3.05	**1.115** 28.32	**.180** 4.57	640505-3	2-640505-4	
36	**.062** 1.57	**1.610** 40.89	**.120** 3.05	640506-1	2-640506-2	1-640526-0
	.120 3.05	**1.610** 40.89	**.180** 4.57	640506-3	2-640506-4	

[1]Duplex Finish — Plated with .000030 [.000762] min. gold in mating area, matte tin on solder tail end over .000050 [.00127] min. nickel underplate on entire contact.

Note: All part numbers are RoHS Compliant.

High Density Catalog.pdf 1 05/04/2022 15:03:34

VAL-U-LOK Connector System (Wire-to-Wire, Wire-to-Board and Wire-to-Panel)

Product Facts

- Low cost, wire-to-wire, wire-to-board and wire-to-panel connectors with 4.2 mm centerline
- Easy mate and unmate with positive latch design
- Single row, 3-5 positions: receptacles, panel mount or free-hanging plugs
- Double row, 2-24 positions (even only): receptacles, panel mount or free-hanging plugs, and vertical or right-angle pin headers
- Available in UL 94V-2 or UL 94V-0 flammability rated nylon
- Products are lead free to help promote a cleaner environment
- Intermateable and interchangeable with Molex Mini-Fit, Jr. and intermateable AMP-DUAC connectors
- Recognized under the Component Program of Underwriters Laboratories Inc., File No. E28476
- Certified by Canadian Standards Association, File No. 208567
- Tyco Electronics Design For Environment (DFE) Standard 230-5

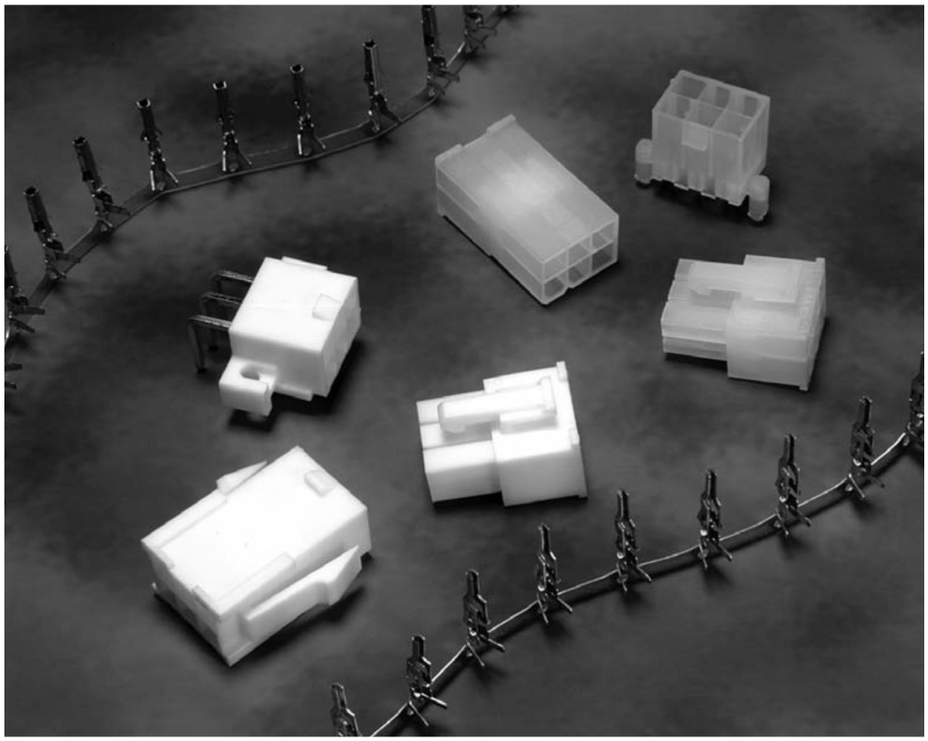

Performance Characteristics

Electrical

Voltage—600 VAC

Current—9 amps max. in 2-position applications

Dielectric Withstanding Voltage—1500 VAC min.

Insulation Resistance—1000 megohms min.

Operating Temperature—–40°C to +105°C [–40°F to +221°F]

Mechanical

Connector Mating—1.55 lb. [6.90 N] max. per circuit

Connector Unmating—.11 lb. [.49 N] min. per circuit

Contact Retention—4.88 lb. [21.71 N] min. per contact

Durability—30 cycles, mating and unmating

Material and Finish

Housings—Nylon, UL 94V-2 and UL 94V-0

Contacts—Brass or Phos. Bronze with tin plating (Lead-Free) or gold plating

Technical Documents

Design Objective
108-2112

Application Specification
114-13172

Engineering Test Report
502-1204

Applications

- Computer motherboards/power supplies
- Harness assemblies used in the Vending, Gaming and Appliance industries
- Car alarm systems
- Heating systems

Molex and Mini-Fit are trademarks of Molex Incorporated.

Catalog 82181
Revised 4-08

https://cwindustrial.co.za/

Dimensions are in inches and millimeters unless otherwise specified. Values in brackets are metric equivalents.

Dimensions are shown for reference purposes only. Specifications subject to change.

USA: 1-800-522-6752
Canada: 1-905-470-4425
Mexico: 01-800-733-8926
C. America: 52-55-1106-0803

South America: 55-11-2103-6000
Hong Kong: 852-2735-1628
Japan: 81-44-844-8013
UK: 44-8706-080-208

High Density Catalog.pdf 1 05/04/2022 15:04:01

VAL-U-LOK Connector System (Wire-to-Wire, Wire-to-Board and Wire-to-Panel) (Continued)

Contacts

Wire Range (AWG)	Insulation Range	Material & Finish	Pin		Socket		Applicator Part Number[1]	PRO-CRIMPER III Hand Tool Part Number
			Strip Form	Loose Piece	Strip Form	Loose Piece		
26-22	.047 - .069 [1.2 - 1.75]	Brass, Pre-Tin	794957-1	1586316-1	794958-1	1586317-1	1385448-X	91387-1
		Phos. Brz., Pre-Tin	794957-3	1586316-3	794958-3	1586317-3		
		Brass, Gold	794957-2	1586316-2	794958-2	1586317-2		
		Phos. Brz., Gold	794957-4	1586316-4	794958-4	1586317-4		
22-18	.060 - .122 [1.50 - 3.10]	Brass, Pre-Tin	794955-1	1586314-1	794956-1	1586315-1	1852668-X	91388-1
		Phos. Brz., Pre-Tin	794955-3	1586314-3	794956-3	1586315-3		
		Brass, Gold	794955-2	1586314-2	794956-2	1586315-2		
		Phos. Brz., Gold	794955-4	1586314-4	794956-4	1586315-4		
16	.071 - .122 [1.8 - 3.10]	Brass, Pre-Tin	1586054-1	1586840-1	1586055-1	1586841-1	1852294-X	1976444-1
		Phos. Brz., Pre-Tin	1586054-3	1586840-3	1586055-3	1586841-2		
		Brass, Gold	1586054-2	1586840-2	1586055-2	1586841-3		
		Phos. Brz., Gold	1586054-4	1586840-4	1586055-4	1586841-4		

Extraction Tool Part Number 1586343-1
[1] For applicator and machine part numbers, contact Technical Support.

Pin — (used in Plug Housing)

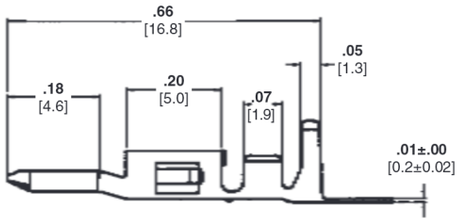

Socket — (used in Receptacle Housing)

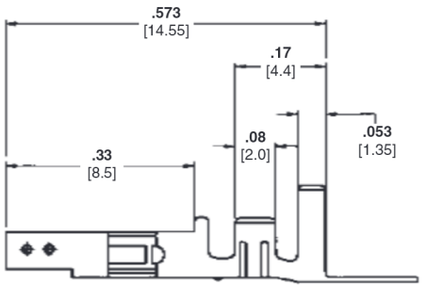

Catalog 82181
Revised 4-08

https://cwindustrial.co.za/

Dimensions are in inches and millimeters unless otherwise specified. Values in brackets are metric equivalents.

Dimensions are shown for reference purposes only. Specifications subject to change.

USA: 1-800-522-6752
Canada: 1-905-470-4425
Mexico: 01-800-733-8926
C. America: 52-55-1106-0803

South America: 55-11-2103-6000
Hong Kong: 852-2735-1628
Japan: 81-44-844-8013
UK: 44-8706-080-208

High Density Catalog.pdf 1 05/04/2022 15:04:19

VAL-U-LOK Connector System (Wire-to-Wire, Wire-to-Board and Wire-to-Panel) (Continued)

Housings — Single Row

No. of Positions	UL 94V-2 Housings			UL 94V-0 Housings		
	Panel Mount Plug	Free-Hanging Plug	Receptacle Housing	Panel Mount Plug	Free-Hanging Plug	Receptacle Housing
3*	1586101-3	1586103-3	1586105-3	1586102-3	1586104-3	1586106-3
4	1586022-4	1586024-4	1586026-4	1586023-4	1586025-4	1586027-4
5	1586022-5	1586024-5	1586026-5	1586023-5	1586025-5	1586027-5

*Note: 3 position housings are First Mate/Last Break.

Note: All part numbers are RoHS Compliant.

Panel Mount Plug Housing

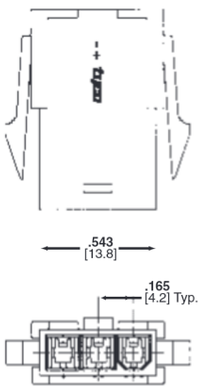

Receptacle Housing

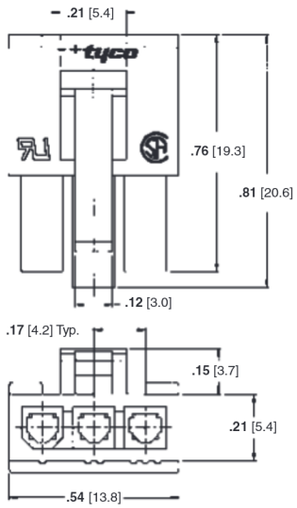

Free-Hanging Plug Housing

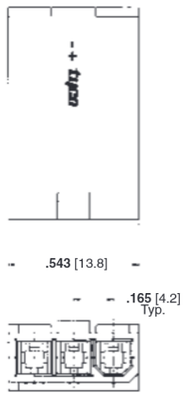

Headers — Single Row, Vertical

No. of	UL 94V-2 Housings		UL 94V-0 Housings
	With Drain Holes	Without Drain Holes	With Drain Holes
3*	2029054-3	2029058-3	2029056-3
4	2029054-4	2029058-4	2029056-4
5	2029054-5	2029058-5	2029056-5

*Note: 3 position housings are First Mate/Last Break.

Note: All part numbers are RoHS Compliant.

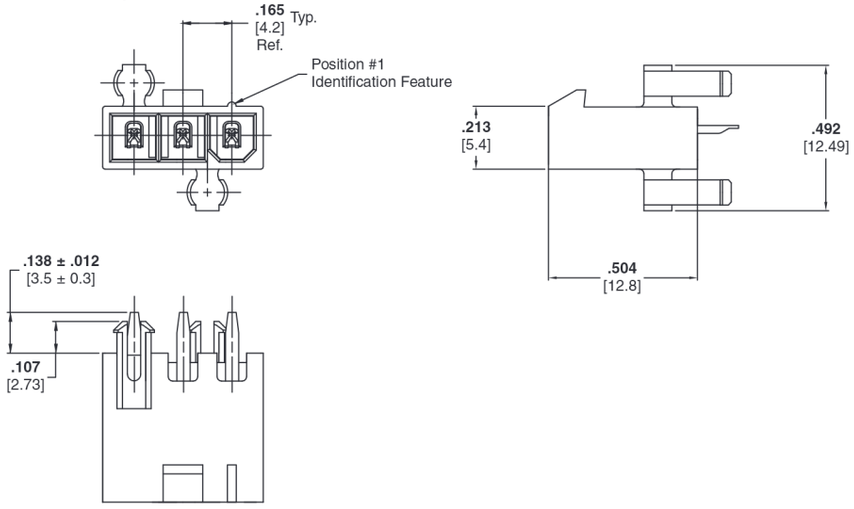

Catalog 82181
Revised 4-08

https://cwindustrial.co.za/

Dimensions are in inches and millimeters unless otherwise specified. Values in brackets are metric equivalents.

Dimensions are shown for reference purposes only. Specifications subject to change.

USA: 1-800-522-6752
Canada: 1-905-470-4425
Mexico: 01-800-733-8926
C. America: 52-55-1106-0803

South America: 55-11-2103-6000
Hong Kong: 852-2735-1628
Japan: 81-44-844-8013
UK: 44-8706-080-208

High Density Catalog.pdf 1 05/04/2022 15:04:44

VAL-U-LOK Connector System (Wire-to-Wire, Wire-to-Board and Wire-to-Panel) (Continued)

Housings — Double Row

No. of Positions	UL 94V-2 Housings			UL 94V-0 Housings		
	Panel Mount Plug	Free-Hanging Plug	Receptacle Housing	Panel Mount Plug	Free-Hanging Plug	Receptacle Housing
2	794953-2	1586000-2	794954-2	1586018-2	1586017-2	1586019-2
4	794953-4	1586000-4	794954-4	1586018-4	1586017-4	1586019-4
6	794953-6	1586000-6	794954-6	1586018-6	1586017-6	1586019-6
8	794953-8	1586000-8	794954-8	1586018-8	1586017-8	1586019-8
10	1-794953-0	1-1586000-0	1-794954-0	1-1586018-0	1-1586017-0	1-1586019-0
12	1-794953-2	1-1586000-2	1-794954-2	1-1586018-2	1-1586017-2	1-1586019-2
14	1-794953-4	1-1586000-4	1-794954-4	1-1586018-4	1-1586017-4	1-1586019-4
16	1-794953-6	1-1586000-6	1-794954-6	1-1586018-6	1-1586017-6	1-1586019-6
18	1-794953-8	1-1586000-8	1-794954-8	1-1586018-8	1-1586017-8	1-1586019-8
20	2-794953-0	2-1586000-0	2-794954-0	2-1586018-0	2-1586017-0	2-1586019-0
22	2-794953-2	2-1586000-2	2-794954-2	2-1586018-2	2-1586017-2	2-1586019-2
24	2-794953-4	2-1586000-4	2-794954-4	2-1586018-4	2-1586017-4	2-1586019-4

Note: Plug housings accept pin contacts and receptacle housings accept socket contacts on page 114.

Note: All part numbers are RoHS Compliant.

Panel Mount Plug Housing

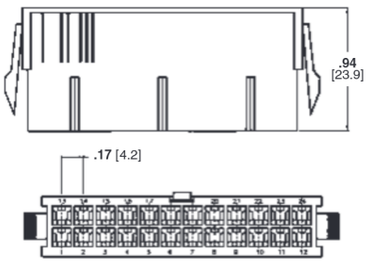

Receptacle Housing

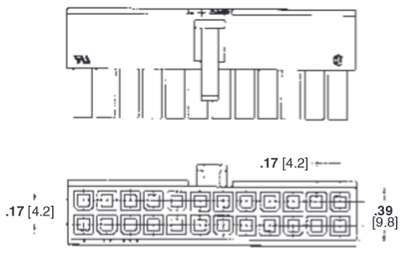

Free-Hanging Plug Housing

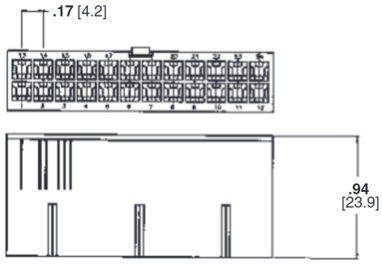

Housings — Colored

Color	No. of Positions	UL 94V-2 Housings			UL 94V-0 Housings		
		Panel Mount Plug	Free-Hanging Plug	Receptacle Housing	Panel Mount Plug	Free-Hanging Plug	Receptacle Housing
Black	2-24	X-2029088-X	X-2029027-X	X-1586075-X	X-2029035-X	X-2029028-X	X-2029029-X
Red	4-24	X-2029089-X	X-2029090-X	X-2029091-X	X-2029092-X	X-2029093-X	X-2029094-X
Blue	6-24	X-2029095-X	X-2029096-X	X-2029097-X	X-2029098-X	X-2029099-X	X-2029100-X

Note: Plug housings accept pin contacts and receptacle housings accept socket contacts on page 114.

Note: All part numbers are RoHS Compliant.

Catalog 82181
Revised 4-08

https://cwindustrial.co.za/

Dimensions are in inches and millimeters unless otherwise specified. Values in brackets are metric equivalents.

Dimensions are shown for reference purposes only. Specifications subject to change.

USA: 1-800-522-6752
Canada: 1-905-470-4425
Mexico: 01-800-733-8926
C. America: 52-55-1106-0803

South America: 55-11-2103-6000
Hong Kong: 852-2735-1628
Japan: 81-44-844-8013
UK: 44-8706-080-208

High Density Catalog.pdf 1 05/04/2022 15:05:08

VAL-U-LOK Connector System (Wire-to-Wire, Wire-to-Board and Wire-to-Panel) (Continued)

Pin Headers

No. of Positions	UL 94V-2 Pin Headers				UL 94V-0 Pin Headers			
	Vertical		Right-Angle		Vertical		Right-Angle	
	w/o Pegs	w/Pegs	w/o Pegs	Screw Mount	w/o Pegs	w/Pegs	w/o Pegs	Screw Mount
2	1586037-2	1586039-2	1586041-2	1586043-2	1586038-2	1586040-2	1586042-2	1586044-2
4	1586037-4	1586039-4	1586041-4	1586043-4	1586038-4	1586040-4	1586042-4	1586044-4
6	1586037-6	1586039-6	1586041-6	1586043-6	1586038-6	1586040-6	1586042-6	1586044-6
8	1586037-8	1586039-8	1586041-8	1586043-8	1586038-8	1586040-8	1586042-8	1586044-8
10	1-1586037-0	1-1586039-0	1-1586041-0	1-1586043-0	1-1586038-0	1-1586040-0	1-1586042-0	1-1586044-0
12	1-1586037-2	1-1586039-2	1-1586041-2	1-1586043-2	1-1586038-2	1-1586040-2	1-1586042-2	1-1586044-2
14	1-1586037-4	1-1586039-4	1-1586041-4	1-1586043-4	1-1586038-4	1-1586040-4	1-1586042-4	1-1586044-4
16	1-1586037-6	1-1586039-6	1-1586041-6	1-1586043-6	1-1586038-6	1-1586040-6	1-1586042-6	1-1586044-6
18	1-1586037-8	1-1586039-8	1-1586041-8	1-1586043-8	1-1586038-8	1-1586040-8	1-1586042-8	1-1586044-8
20	2-1586037-0	2-1586039-0	2-1586041-0	2-1586043-0	2-1586038-0	2-1586040-0	2-1586042-0	2-1586044-0
22	2-1586037-2	2-1586039-2	2-1586041-2	2-1586043-2	2-1586038-2	2-1586040-2	2-1586042-2	2-1586044-2
24	2-1586037-4	2-1586039-4	2-1586041-4	2-1586043-4	2-1586038-4	2-1586040-4	2-1586042-4	2-1586044-4

Note: All Headers have Brass, Tin-Plated contacts.

Note: All part numbers are RoHS Compliant.

Vertical Pin Headers (Part No. 1586037 shown w/o pegs)

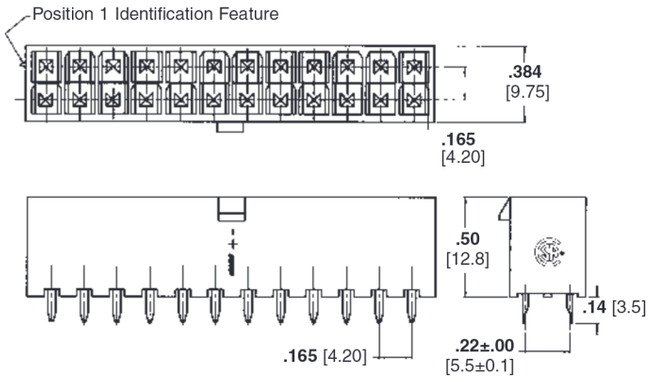

Right-Angle Pin Headers (Part No. 1586043 Screw Mount)

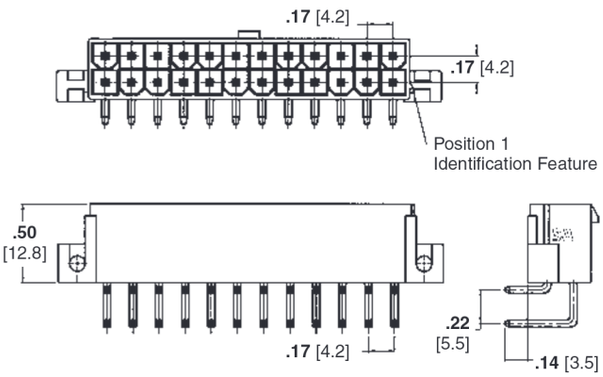

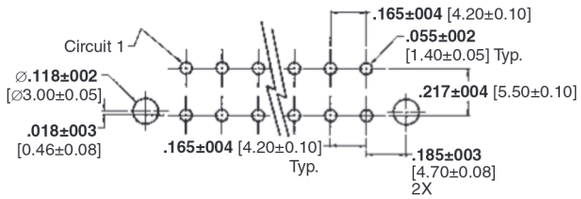

PCB Layout: Component Side (shown with pegs)
Recommended Board Thickness .070 [1.78]

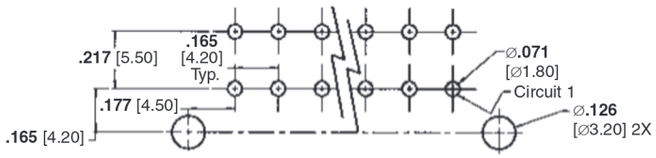

PCB Layout: Component Side (screw mount shown)
Recommended Board Thickness .063 [1.60]

Catalog 82181
Revised 4-08

https://cwindustrial.co.za/

Dimensions are in inches and millimeters unless otherwise specified. Values in brackets are metric equivalents.

Dimensions are shown for reference purposes only. Specifications subject to change.

USA: 1-800-522-6752
Canada: 1-905-470-4425
Mexico: 01-800-733-8926
C. America: 52-55-1106-0803

South America: 55-11-2103-6000
Hong Kong: 852-2735-1628
Japan: 81-44-844-8013
UK: 44-8706-080-208

High Density Catalog.pdf 1 05/04/2022 15:05:27

VAL-U-LOK Connector System (Wire-to-Wire, Wire-to-Board and Wire-to-Panel) (Continued)

Blindmate Headers

No. of Pos.	Dimensions					UL 94V-2 Housings		UL 94V-0 Housings	
	A	B	C	D	E	With Drain Holes	Without Drain Holes	With Drain Holes	Without Drain Holes
2	—	**5.4** [0.21]	**9.4** [0.37]	**10.8** [0.43]	**13.2** [0.52]	1586585-2	1586586-2	1586587-2	1586588-2
4	**4.2** [0.17]	**9.6** [0.38]	**13.6** [0.54]	**15.0** [0.59]	**17.4** [0.69]	1586585-4	1586586-4	1586587-4	1586588-4
6	**8.4** [0.33]	**13.8** [0.54]	**17.8** [0.70]	**19.2** [0.76]	**21.6** [0.85]	1586585-6	1586586-6	1586587-6	1586588-6
8	**12.6** [0.50]	**18.0** [0.71]	**22.0** [0.87]	**23.4** [0.92]	**25.8** [1.02]	1586585-8	1586586-8	1586587-8	1586588-8
10	**16.8** [0.66]	**22.2** [0.87]	**26.2** [1.03]	**27.6** [1.09]	**30.0** [1.18]	1-1586585-0	1-1586586-0	1-1586587-0	1-1586588-0
12	**21.0** [0.83]	**26.4** [1.04]	**30.4** [1.20]	**31.8** [1.25]	**34.2** [1.35]	1-1586585-2	1-1586586-2	1-1586587-2	1-1586588-2
14	**25.2** [0.99]	**30.6** [1.20]	**34.6** [1.36]	**36.0** [1.42]	**38.4** [1.51]	1-1586585-4	1-1586586-4	1-1586587-4	1-1586588-4
16	**29.4** [1.58]	**34.8** [1.37]	**38.8** [1.53]	**40.2** [1.58]	**42.6** [1.69]	1-1586585-6	1-1586586-6	1-1586587-6	1-1586588-6
18	**33.6** [1.32]	**39.0** [1.54]	**43.0** [1.69]	**44.4** [1.75]	**46.8** [1.84]	1-1586585-8	1-1586586-8	1-1586587-8	1-1586588-8
20	**37.8** [1.49]	**43.2** [1.70]	**47.2** [1.86]	**48.6** [1.91]	**51.0** [2.01]	2-1586585-0	2-1586586-0	2-1586587-0	2-1586588-0
22	**42.0** [1.65]	**47.4** [1.87]	**51.4** [2.02]	**52.0** [2.08]	**55.2** [2.17]	2-1586585-2	2-1586586-2	2-1586587-2	2-1586588-2
24	**46.2** [1.82]	**51.6** [2.03]	**55.6** [2.19]	**57.0** [2.24]	**59.4** [2.32]	2-1586585-4	2-1586586-4	2-1586587-4	2-1586588-4

Note: All part numbers are RoHS Compliant.

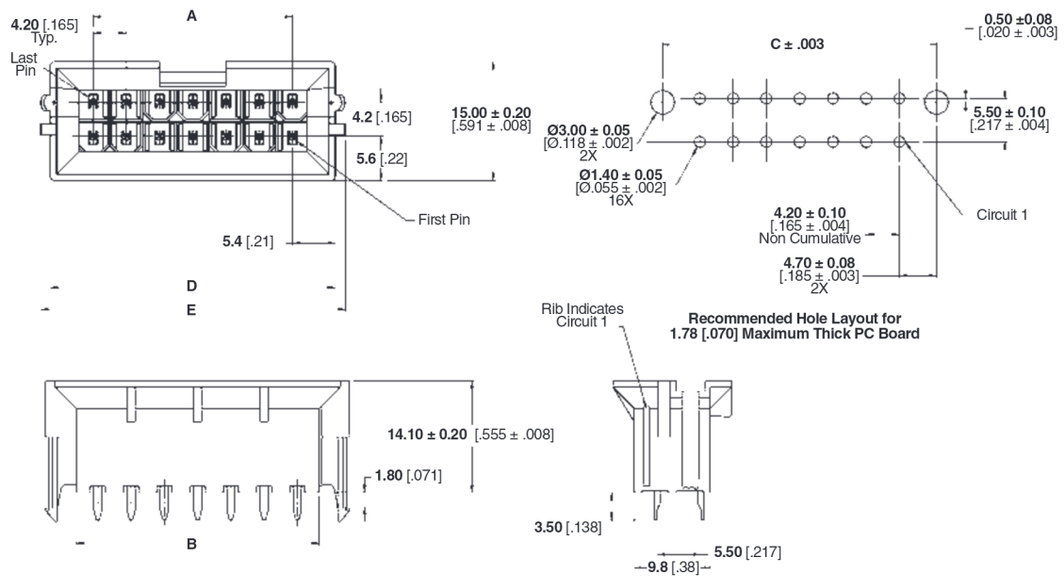

Catalog 82181
Revised 4-08
https://cwindustrial.co.za/

Dimensions are in inches and millimeters unless otherwise specified. Values in brackets are metric equivalents.

Dimensions are shown for reference purposes only. Specifications subject to change.

USA: 1-800-522-6752
Canada: 1-905-470-4425
Mexico: 01-800-733-8926
C. America: 52-55-1106-0803
South America: 55-11-2103-6000
Hong Kong: 852-2735-1628
Japan: 81-44-844-8013
UK: 44-8706-080-208

High Density Catalog.pdf 1 05/04/2022 15:05:47

AMP-DUAC Connectors

Product Facts

- Wire-to-board and wire-to-wire connector system
- Free-hanging or panel mount plug housings
- Vertical header with or without mounting pegs and with or without drain holes
- Selective loading available on vertical headers
- 4.2 mm x 4.2 mm centerline
- Male and female contacts designed for 26-22 AWG and 22-18 AWG wire
- Receptacle housings accept female contacts with less orientation than competitive product
- Right-angle headers
- Designed for power applications
- Positive latch feature helps prevent disconnection
- AMP-DUAC (dual action) receptacle contacts
- Anti-stubbing contact design
- Polarized housings
- Intermateable with Molex Mini-Fit Jr. connectors
- Recognized under Component Program of Underwriters Laboratories Inc., File No. E28476
- Certified by Canadian Standards Association, File No. LR7189

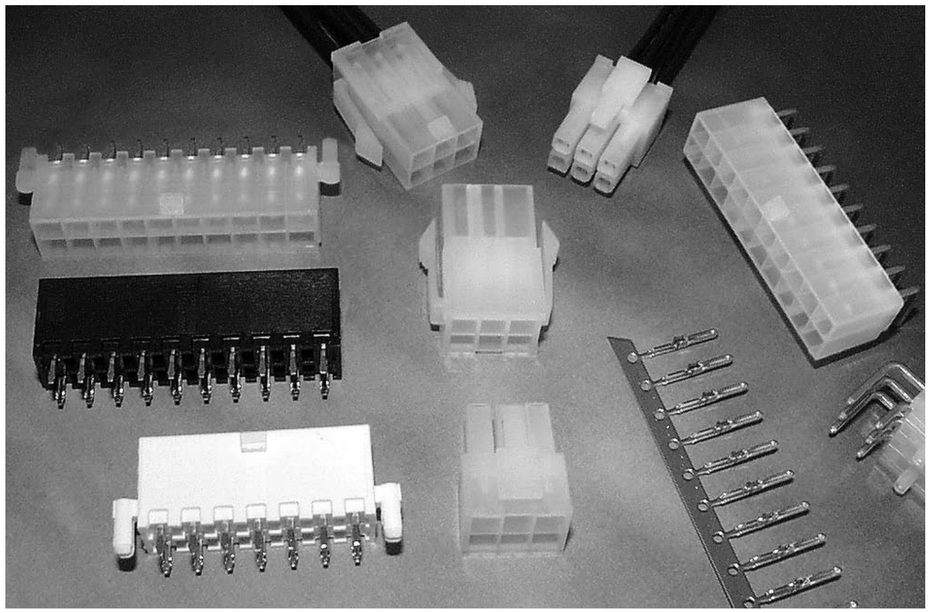

AMP-DUAC Connectors, for power or signal applications, belong to the broad family of Tyco Electronics Soft Shell connectors.

The dual action design of the female receptacle contact provides for low insertion force, yet maintains high-performance current capacity. To help meet your production requirements, semiautomatic bench machines and hand tools are available for strip and loose piece contacts, respectively.

High density, 4.2 mm x 4.2 mm [.165 x .165] centerline, dual-row receptacle housings mate with plug housings (free-hanging or panel mount) or pc board headers (vertical or right-angle). Selective contact loading is available for vertical headers.

All housings are polarized for easier mating and locking latches help maintain reliable connections.

AMP-DUAC wire-to-board, wire-to-panel, and wire-to-wire connectors are intermateable with Molex Mini-Fit Jr. series connectors.

Technical Documents

Product Specifications
108-1699—Headers
108-19099—Receptacles

Application Specification
114-19048—Use of Receptacles

Qualification Test Report
501-434
501-576

Performance Data

Voltage Rating—600 VAC

Current Rating—9 amps maximum in 2 position applications

Low Level Resistance—10 megohms max.

Dielectric Withstanding Voltage—1500 VAC/min.

Insulation Resistance—1000 megohms minimum

Operating Temperature—–55°C to +105°C [–67°F to +221°F]

Need more information?

Call Technical Support.

Technical Support is staffed with specialists well versed in Tyco Electronics products. They can provide you with:

- Technical support
- Catalogs
- Technical Documents
- Product Samples
- Tyco Electronics Authorized Distributor Locations

Catalog 82181
Revised 4-08

https://cwindustrial.co.za/

Dimensions are in inches and millimeters unless otherwise specified. Values in brackets are metric equivalents.

Dimensions are shown for reference purposes only. Specifications subject to change.

USA: 1-800-522-6752
Canada: 1-905-470-4425
Mexico: 01-800-733-8926
C. America: 52-55-1106-0803

South America: 55-11-2103-6000
Hong Kong: 852-2735-1628
Japan: 81-44-844-8013
UK: 44-8706-080-208

High Density Catalog.pdf 1 05/04/2022 15:06:06

AMP-DUAC Connectors (Continued)

Receptacle Housings

2-24 Position Housings

Accept female contacts.

Material

Housings—Nylon
UL 94V-2, Natural color
UL 94V-0, White color

Related Product Data

Mate with—Vertical headers (pages 128-133), right-angle headers (page 128) and plug housings (page 127).

Contacts—See below.

Strain Relief—See below and page 127.

Technical Documents—pages 125 and 205-206

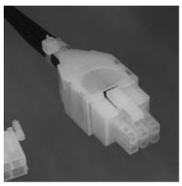

Strain Relief, 6 Position Part Number 1375618-1

Used with plug or receptacle housings.

Wire Bundle Range—4.19-5.59 [.165-.220]

Material—Nylon, UL 94V-2, Natural color

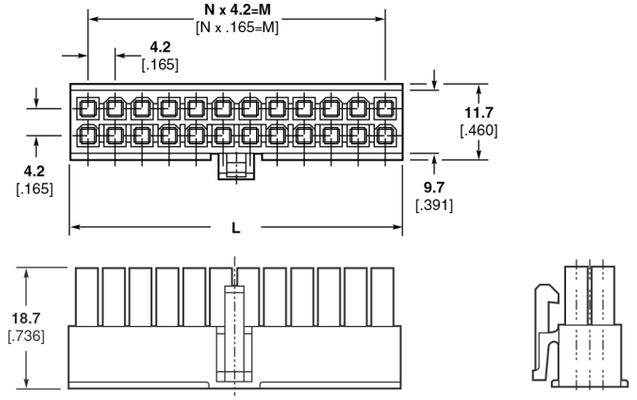

Number of Positions	Dimensions			Part Number	
	L	M	N	UL 94V-2 Natural	UL 94V-0 White
2	**5.5** .216	—	**1**	106527-2	794657-2
4	**9.7** .381	**4.2** .165	**1**	106527-4	794657-4
6	**13.9** .547	**8.4** .330	**2**	106527-6	794657-6
8	**18.1** .712	**12.6** .496	**3**	106527-8	794657-8
10	**22.3** .877	**16.8** .661	**4**	1-106527-0	1-794657-0
12	**26.5** 1.043	**21.0** .826	**5**	1-106527-2	1-794657-2
14	**30.7** 1.208	**25.2** .992	**6**	1-106527-4	1-794657-4
16	**34.9** 1.374	**29.4** 1.157	**7**	1-106527-6	1-794657-6
18	**39.1** 1.539	**33.6** 1.322	**8**	1-106527-8	1-794657-8
20	**43.3** 1.704	**37.8** 1.488	**9**	2-106527-0	2-794657-0
22	**47.5** 1.870	**42.0** 1.653	**10**	2-106527-2	2-794657-2
24	**51.7** 2.035	**46.2** 1.818	**11**	2-106527-4	2-794657-4

Female Contacts

Used in receptacle housings.

Material—Phos. Bronze

Application Tooling—See chart and pages 207-210

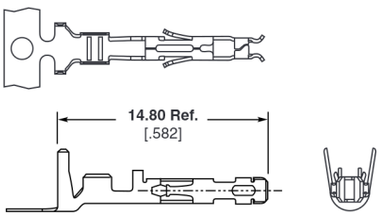

Technical Documents

Product Specifications
108-1699 AMP-DUAC Header
108-19099 AMP-DUAC Receptacle

Application Specification
114-19048 AMP-DUAC Receptacle Contact

Wire Size Range AWG [mm²]	Ins. Dia. Range	Plating	Part Number		Applicator Part Number		
			Strip Form	Loose Piece	for AMP-O-LECTRIC Bench Machine	for AMP-O-MATIC Stripper/Crimper Machine	CERTI-CRIMP Hand Tool Part Number
22-18 [.3-.8]	**1.5-2.4** .059-.094	Tin	106529-2	1-106529-2	680308-□*	567959-1	734202-2
		Gold	1-794138-3	1-794141-3			
26-22 [.12-.3]	**1.3-1.75** .047-.069	Tin	106528-2	1-106528-2	680307-□*	567960-1	—
		Gold	1-794139-3	1-794142-3			
2@18 or 16 [.8-.9] [1.29]	**3.3** Total Max. .130	Tin	794418-1	794421-1	680350-□*	—	90714-1
		Gold	1-794140-3	1-794143-3			

Extraction Tool Part Number 188688-1

*Part Number suffix "-2" indicates Applicator for Model K Machine and "-3" for Model G Machine.

Note: **All part numbers are RoHS Compliant.**

Catalog 82181
Revised 4-08

https://cwindustrial.co.za/

Dimensions are in inches and millimeters unless otherwise specified. Values in brackets are metric equivalents.

Dimensions are shown for reference purposes only. Specifications subject to change.

USA: 1-800-522-6752
Canada: 1-905-470-4425
Mexico: 01-800-733-8926
C. America: 52-55-1106-0803

South America: 55-11-2103-6000
Hong Kong: 852-2735-1628
Japan: 81-44-844-8013
UK: 44-8706-080-208

High Density Catalog.pdf 1 05/04/2022 15:06:32

AMP-DUAC Connectors (Continued)

Plug Housings

2-24 Position Housings

Accept male contacts.

Material

Housings— Nylon
UL 94V-2, Natural color
UL 94V-0, White color

Related Product Data

Mate with—Receptacle housings (page 126)
Contacts— See below.
Strain Relief— See below.
Technical Documents— pages 125 and 205-206

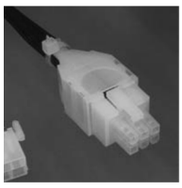

Strain Relief, 6 Position Part Number 1375618-1

Used with plug or receptacle housings.

Wire Bundle Range— 4.19-5.59 [.165-.220]
Material— Nylon, UL 94V-2, Natural color

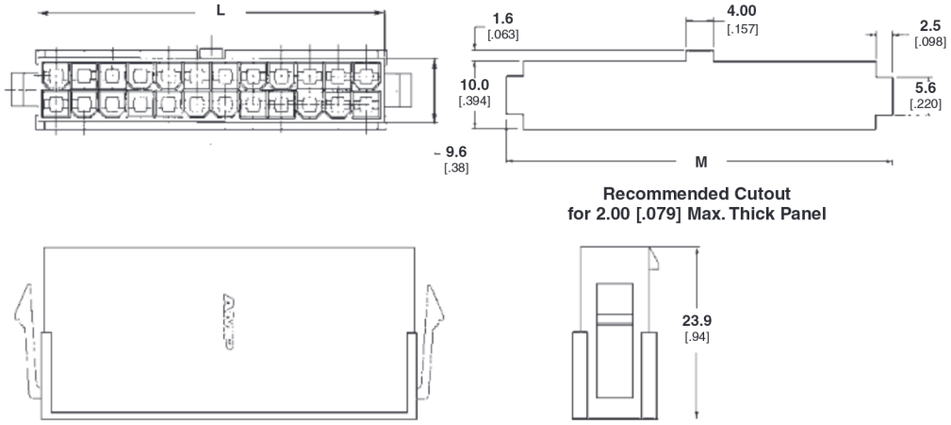

Number of Positions	Dimensions		Part Number			
			UL 94V-2, Natural		UL 94V-0, White	
	L	M	Free-Hanging	Panel Mount	Free-Hanging	Panel Mount
2	**5.4** .213	**10.8** .425	794542-2	794550-2	*794594-2	*794598-2
4	**9.6** .378	**15.0** .591	794542-4	794550-4	*794594-4	*794598-4
6	**13.8** .543	**19.2** .756	794542-6	794550-6	*794594-6	*794598-6
8	**18.0** .709	**23.4** .921	794542-8	794550-8	*794594-8	*794598-8
10	**22.2** .874	**27.6** 1.087	1-794542-0	1-794550-0	*1-794594-0	*1-794598-0
12	**26.4** 1.039	**31.8** 1.252	1-794542-2	1-794550-2	*1-794594-2	*1-794598-2
14	**30.6** .205	**36.0** 1.417	1-794542-4	1-794550-4	*1-794594-4	*1-794598-4
16	**34.8** 1.370	**40.2** 1.583	1-794542-6	1-794550-6	*1-794594-6	*1-794598-6
18	**39.0** 1.535	**44.4** 1.748	1-794542-8	1-794550-8	*1-794594-8	*1-794598-8
20	**43.2** 1.701	**48.6** 1.913	2-794542-0	2-794550-0	*2-794594-0	*2-794598-0
22	**47.4** 1.866	**52.8** 2.079	2-794542-2	2-794550-2	*2-794594-2	*2-794598-2
24	**51.6** 2.032	**57.0** 2.244	2-794542-4	2-794550-4	*2-794594-4	*2-794598-4

*Call for availability.

Male Contacts

Used in plug housings.

Material— Phos. Bronze

Application Tooling— See chart and pages 207-210



Wire Size Range AWG [mm²]	Ins. Dia. Range	Plating	Part Number		Applicator Part Number		
			Strip Form	Loose Piece	for AMP-O-LECTRIC Bench Machine	for AMP-O-MATIC Stripper/Crimper Machine	CERTI-CRIMP Hand Tool Part Number
22-18 [.3-.8]	**1.5-2.4** .059-.094	Tin	794576-1	794577-1	680308-□*	567959-1	734202-2
		Gold	794576-4	——			
26-22 [.12-.3]	**1.3-1.75** .047-.069	Tin	794578-1	794579-1	680307-□*	567960-1	—
		Gold	794578-4	——			

*Part Number suffix "-2" indicates Applicator for Model K Machine and "-3" for Model G Machine.

Note: All part numbers are RoHS Compliant.

Catalog 82181
Revised 4-08

https://cwindustrial.co.za/

Dimensions are in inches and millimeters unless otherwise specified. Values in brackets are metric equivalents.

Dimensions are shown for reference purposes only. Specifications subject to change.

USA: 1-800-522-6752
Canada: 1-905-470-4425
Mexico: 01-800-733-8926
C. America: 52-55-1106-0803

South America: 55-11-2103-6000
Hong Kong: 852-2735-1628
Japan: 81-44-844-8013
UK: 44-8706-080-208

High Density Catalog.pdf 1 05/04/2022 15:06:51

AMP-DUAC Connectors (Continued)

Vertical Header Assemblies

2, 4 and 6 Position, with and without Pegs and with and without Drain Holes

Material and Finish

Housing— Nylon
UL 94V-2, Natural color
UL 94V-0, White color

Contacts— 0.25 [.010] thick copper alloy

Related Product Data

Mate with—Receptacle housings (page 126).

Technical Documents— pages 125 and 205-206

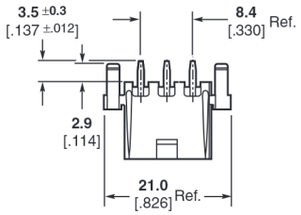

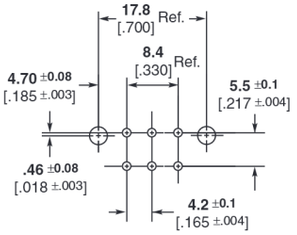

Recommended PC Board Layout

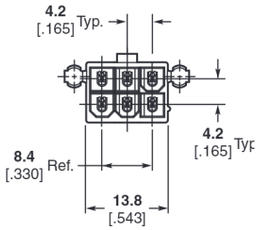

Number of Positions	PCB Pegs	Drain Holes	Plating	Part Number	
				UL 94V-2, Natural	UL 94V-0, White
2	N	N	Tin	1586491-2	1586495-2
	N	N	30 Gold	1586492-2	1586496-2
	Y	N	Tin	1586489-2	1586493-2
	Y	N	30 Gold	1586490-2	1586494-2
	N	Y	Tin	1-794349-1	1-794543-1
	N	Y	30 Gold	1-794349-2	1-794543-2
	Y	Y	Tin	1-794302-1	1-794540-1
	Y	Y	30 Gold	1-794302-2	1-794540-2
4	Y	N	Tin	1586489-4	1586493-4
	Y	N	30 Gold	1586490-4	1586494-4
	N	N	Tin	1586491-4	1586495-4
	N	N	30 Gold	1586492-4	1586496-4
	Y	Y	Tin	1-794303-1	1-794466-1
	Y	Y	30 Gold	1-794303-2	1-794466-2
	N	Y	Tin	1-794350-1	1-794484-1
	N	Y	30 Gold	1-794350-2	1-794484-2
6	Y	Y	Tin	1-794304-1	1-794467-1
	Y	Y	30 Gold	1-794304-2	1-794467-2
	N	Y	Tin	1-794351-1	1-794485-1
	N	Y	30 Gold	1-794351-2	1-794485-2
	Y	N	Tin	1586489-6	1586493-6
	Y	N	30 Gold	1586490-6	1586494-6
	N	N	Tin	1586491-6	1586495-6
	N	N	30 Gold	1586492-6	1586496-6

Note: **All part numbers are RoHS Compliant.**

Catalog 82181
Revised 4-08

https://cwindustrial.co.za/

Dimensions are in inches and millimeters unless otherwise specified. Values in brackets are metric equivalents.

Dimensions are shown for reference purposes only. Specifications subject to change.

USA: 1-800-522-6752
Canada: 1-905-470-4425
Mexico: 01-800-733-8926
C. America: 52-55-1106-0803

South America: 55-11-2103-6000
Hong Kong: 852-2735-1628
Japan: 81-44-844-8013
UK: 44-8706-080-208

High Density Catalog.pdf 1 05/04/2022 15:07:15

AMP-DUAC Connectors (Continued)

Vertical Header Assemblies (Continued)

8 and 10 Position, with and without Pegs and with and without Drain Holes

Material and Finish

Housing—Nylon
UL 94V-2, Natural color
UL 94V-0, White color

Contacts—0.25 [.010] thick copper alloy

Related Product Data

Mate with—Receptacle housings (page 126).

Technical Documents—pages 125 and 205-206

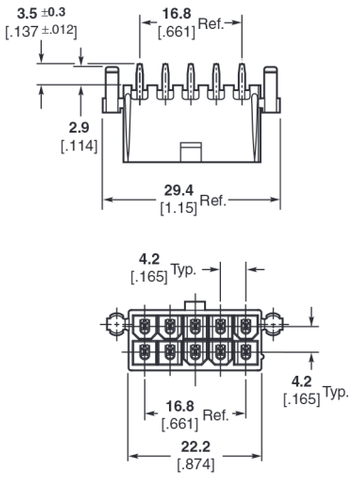

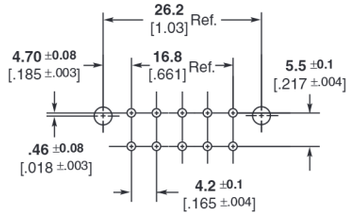

Recommended PC Board Layout

Number of Positions	PCB Pegs	Drain Holes	Plating	Part Number	
				UL 94V-2, Natural	UL 94V-0, White
8	Y	N	Tin	1586489-8	1586493-8
	Y	N	30 Gold	1586490-8	1586494-8
	N	N	Tin	1586491-8	1586495-8
	N	N	30 Gold	1586492-8	1586496-8
	Y	Y	Tin	1-794305-1	1-794468-1
	Y	Y	30 Gold	1-794305-2	1-794468-2
	N	Y	Tin	1-794352-1	1-794486-1
	N	Y	30 Gold	1-794352-2	1-794486-2
10	Y	N	Tin	1-1586489-0	1-1586493-0
	Y	N	30 Gold	1-1586490-0	1-1586494-0
	N	N	Tin	1-1586491-0	1-1586495-0
	N	N	30 Gold	1-1586492-0	1-1586496-0
	Y	Y	Tin	1-794306-1	1-794469-1
	Y	Y	30 Gold	1-794306-2	1-794469-2
	N	Y	Tin	1-794353-1	1-794487-1
	N	Y	30 Gold	1-794353-2	1-794487-2

Note: **All part numbers are RoHS Compliant.**

Catalog 82181
Revised 4-08

https://cwindustrial.co.za/

Dimensions are in inches and millimeters unless otherwise specified. Values in brackets are metric equivalents.

Dimensions are shown for reference purposes only. Specifications subject to change.

USA: 1-800-522-6752
Canada: 1-905-470-4425
Mexico: 01-800-733-8926
C. America: 52-55-1106-0803

South America: 55-11-2103-6000
Hong Kong: 852-2735-1628
Japan: 81-44-844-8013
UK: 44-8706-080-208

High Density Catalog.pdf 1 05/04/2022 15:07:45

AMP-DUAC Connectors (Continued)

Vertical Header Assemblies (Continued)

12 Position, with and without Pegs and with and without Drain Holes

Material and Finish

Housing— Nylon
UL 94V-2, Natural color
UL 94V-0, White color
Contacts— 0.25 [.010] thick copper alloy

Related Product Data

Mate with—Receptacle housings (page 126).
Technical Documents— pages 125 and 205-206

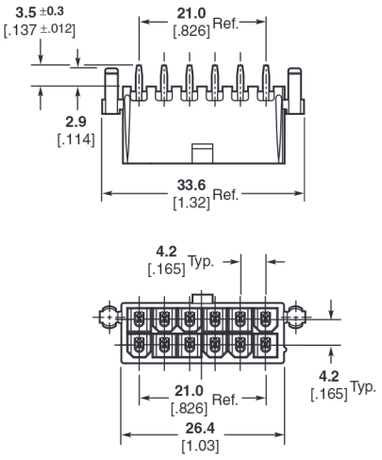

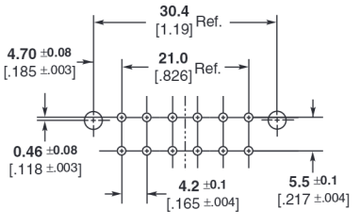

Recommended PC Board Layout

Number of Positions	PCB Pegs	Drain Holes	Plating	Part Number	
				UL 94V-2, Natural	UL 94V-0, White
12	Y	N	Tin	1-1586489-2	1-1586493-2
	Y	N	30 Gold	1-1586490-2	1-1586494-2
	N	N	Tin	1-1586491-2	1-1586495-2
	N	N	30 Gold	1-1586492-2	1-1586496-2
	Y	Y	Tin	1-794307-1	1-794470-1
	Y	Y	30 Gold	1-794307-2	1-794470-2
	N	Y	Tin	1-794354-1	1-794488-1
	N	Y	30 Gold	1-794354-2	1-794488-2

14 Position, with and without Pegs and with and without Drain Holes

Material and Finish

Housing— Nylon
UL 94V-2, Natural color
UL 94V-0, White color
Contacts— 0.25 [.010] thick copper alloy

Related Product Data

Mate with—Receptacle housings (page 126).
Technical Documents— pages 125 and 205-206

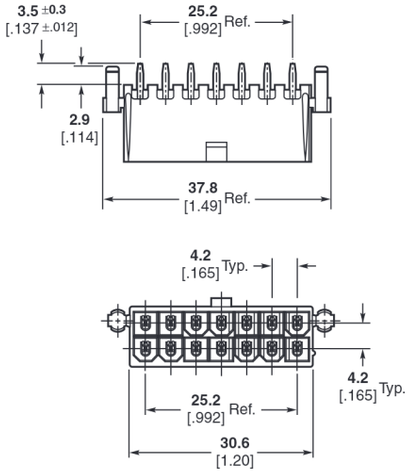

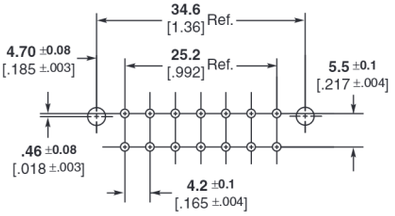

Recommended PC Board Layout

Number of Positions	PCB Pegs	Drain Holes	Plating	Part Number	
				UL 94V-2, Natural	UL 94V-0, White
14	Y	N	Tin	1-1586489-4	1-1586493-4
	Y	N	30 Gold	1-1586490-4	1-1586494-4
	N	N	Tin	1-1586491-4	1-1586495-4
	N	N	30 Gold	1-1586492-4	1-1586496-4
	Y	Y	Tin	1-794308-1	1-794453-1
	Y	Y	30 Gold	1-794308-2	1-794453-2
	N	Y	Tin	1-794355-1	1-794489-1
	N	Y	30 Gold	1-794355-2	1-794489-2

Note: **All part numbers are RoHS Compliant.**

Catalog 82181
Revised 4-08
https://cwindustrial.co.za/

Dimensions are in inches and millimeters unless otherwise specified. Values in brackets are metric equivalents.

Dimensions are shown for reference purposes only. Specifications subject to change.

USA: 1-800-522-6752
Canada: 1-905-470-4425
Mexico: 01-800-733-8926
C. America: 52-55-1106-0803
South America: 55-11-2103-6000
Hong Kong: 852-2735-1628
Japan: 81-44-844-8013
UK: 44-8706-080-208

High Density Catalog.pdf 1 05/04/2022 15:08:40

AMP-DUAC Connectors (Continued)

Vertical Header Assemblies (Continued)

16 Position, with and without Pegs and with and without Drain Holes

Material and Finish

Housing— Nylon
UL 94V-2, Natural color
UL 94V-0, White color
Contacts— 0.25 [.010] thick copper alloy

Related Product Data

Mate with—Receptacle housings (page 126).
Technical Documents— pages 125 and 205-206

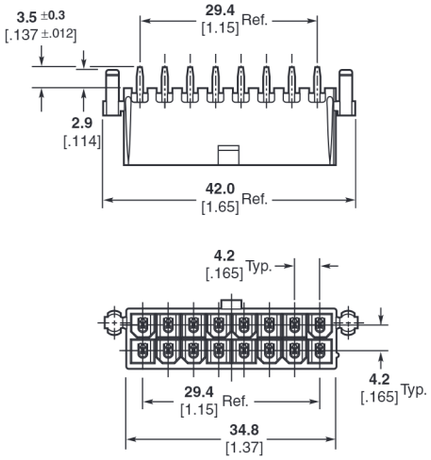

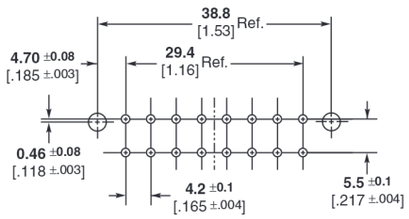

Recommended PC Board Layout

Number of Positions	PCB Pegs	Drain Holes	Plating	Part Number	
				UL 94V-2, Natural	UL 94V-0, White
16	Y	N	Tin	1-1586489-6	1-1586493-6
	Y	N	30 Gold	1-1586490-6	1-1586494-6
	N	N	Tin	1-1586491-6	1-1586495-6
	N	N	30 Gold	1-1586492-6	1-1586496-6
	Y	Y	Tin	1-794309-1	1-794429-1
	Y	Y	30 Gold	1-794309-2	1-794429-2
	N	Y	Tin	1-794356-1	1-794490-1
	N	Y	30 Gold	1-794356-2	1-794490-2

18 Position, with and without Pegs and with and without Drain Holes

Material and Finish

Housing— Nylon
UL 94V-2, Natural color
UL 94V-0, White color
Contacts— 0.25 [.010] thick copper alloy

Related Product Data

Mate with—Receptacle housings (page 126).
Technical Documents— pages 125 and 205-206

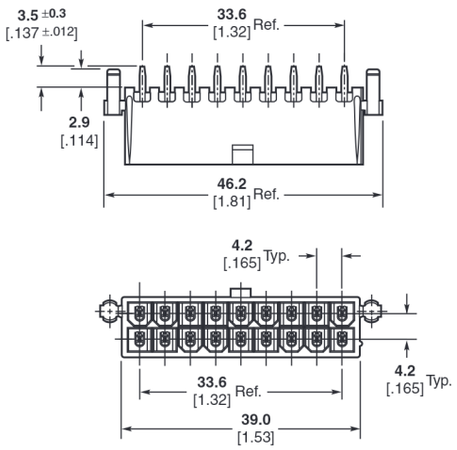

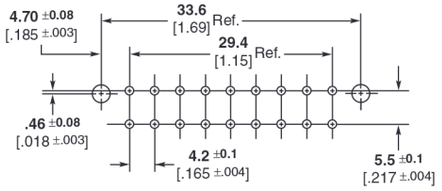

Recommended PC Board Layout

Number of Positions	PCB Pegs	Drain Holes	Plating	Part Number	
				UL 94V-2, Natural	UL 94V-0, White
18	Y	N	Tin	1-1586489-8	1-1586493-8
	Y	N	30 Gold	1-1586490-8	1-1586494-8
	N	N	Tin	1-1586491-8	1-1586495-8
	N	N	30 Gold	1-1586492-8	1-1586496-8
	Y	Y	Tin	1-794310-1	1-794454-1
	Y	Y	30 Gold	1-794310-2	1-794454-2
	N	Y	Tin	1-794357-1	1-794491-1
	N	Y	30 Gold	1-794357-2	1-794491-2

Note: **All part numbers are RoHS Compliant.**

Catalog 82181
Revised 4-08

https://cwindustrial.co.za/

Dimensions are in inches and millimeters unless otherwise specified. Values in brackets are metric equivalents.

Dimensions are shown for reference purposes only. Specifications subject to change.

USA: 1-800-522-6752
Canada: 1-905-470-4425
Mexico: 01-800-733-8926
C. America: 52-55-1106-0803

South America: 55-11-2103-6000
Hong Kong: 852-2735-1628
Japan: 81-44-844-8013
UK: 44-8706-080-208

High Density Catalog.pdf 1 05/04/2022 15:08:59

AMP-DUAC Connectors (Continued)

Vertical Header Assemblies (Continued)

20 Position, with and without Pegs and with and without Drain Holes

Material and Finish

Housing— Nylon
UL 94V-2, Natural color
UL 94V-0, White color
Contacts— 0.25 [.010] thick copper alloy

Related Product Data

Mate with—Receptacle housings (page 126).
Technical Documents— pages 125 and 205-206

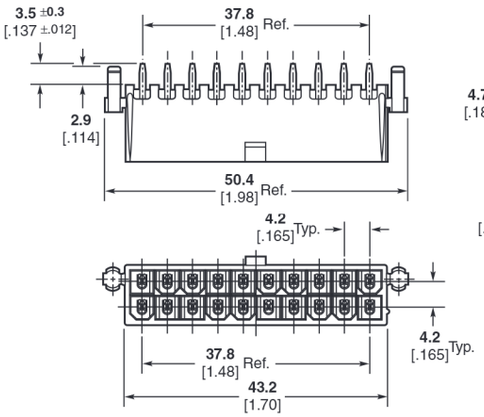

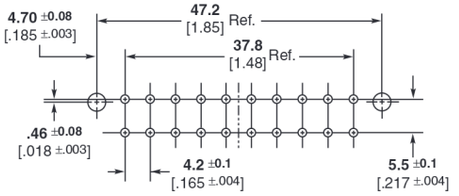

Recommended PC Board Layout

Number of Positions	PCB Pegs	Drain Holes	Plating	Part Number	
				UL 94V-2, Natural	UL 94V-0, White
20	Y	N	Tin	2-1586489-0	2-1586493-0
	Y	N	30 Gold	2-1586490-0	2-1586494-0
	N	N	Tin	2-1586491-0	2-1586495-0
	N	N	30 Gold	2-1586492-0	2-1586496-0
	Y	Y	Tin	1-794311-1	1-794455-1
	Y	Y	30 Gold	1-794311-2	1-794455-2
	N	Y	Tin	1-794358-1	1-794492-1
	N	Y	30 Gold	1-794358-2	1-794492-2

High Temperature Headers

IR Reflow compatible, UL 94V-0, Black color

Number of Positions	PCB Pegs	Drain Holes	Plating	Part Number
				UL 94V-0, Black
20	N	N	Tin	1-794415-1
	N	N	30 Gold	1-794415-2

22 Position, with and without Pegs and with and without Drain Holes

Material and Finish

Housing— Nylon
UL 94V-2, Natural color
UL 94V-0, White color
Contacts— 0.25 [.010] thick copper alloy

Related Product Data

Mate with—Receptacle housings (page 126).
Technical Documents— pages 125 and 205-206

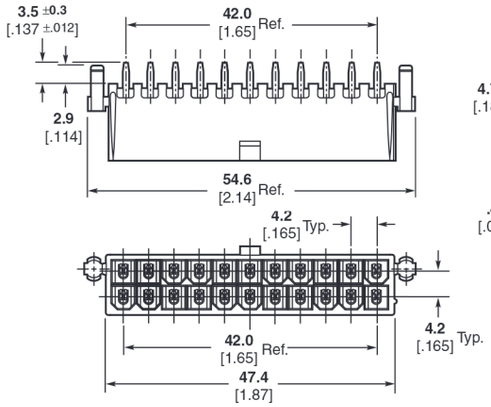

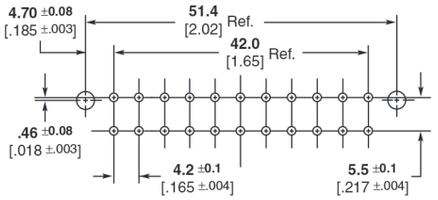

Recommended PC Board Layout

Number of Positions	PCB Pegs	Drain Holes	Plating	Part Number	
				UL 94V-2, Natural	UL 94V-0, White
22	Y	N	Tin	2-1586489-2	2-1586493-2
	Y	N	30 Gold	2-1586490-2	2-1586494-2
	N	N	Tin	2-1586491-2	2-1586495-2
	N	N	30 Gold	2-1586492-2	2-1586496-2
	Y	Y	Tin	1-794312-1	1-794471-1
	Y	Y	30 Gold	1-794312-2	1-794471-2
	N	Y	Tin	1-794359-1	1-794493-1
	N	Y	30 Gold	1-794359-2	1-794493-2

Note: All part numbers are RoHS Compliant.

Catalog 82181
Revised 4-08
https://cwindustrial.co.za/

Dimensions are in inches and millimeters unless otherwise specified. Values in brackets are metric equivalents.

Dimensions are shown for reference purposes only. Specifications subject to change.

USA: 1-800-522-6752
Canada: 1-905-470-4425
Mexico: 01-800-733-8926
C. America: 52-55-1106-0803
South America: 55-11-2103-6000
Hong Kong: 852-2735-1628
Japan: 81-44-844-8013
UK: 44-8706-080-208

High Density Catalog.pdf 1 05/04/2022 15:09:19

AMP-DUAC Connectors (Continued)

Vertical Header Assemblies (Continued)

24 Position, with and without Pegs and with and without Drain Holes

Material and Finish

Housing— Nylon
UL 94V-2, Natural color
UL 94V-0, White color
Contacts— 0.25 [.010] thick copper alloy

Related Product Data

Mate with—Receptacle housings (page 126).
Technical Documents— pages 125 and 205-206

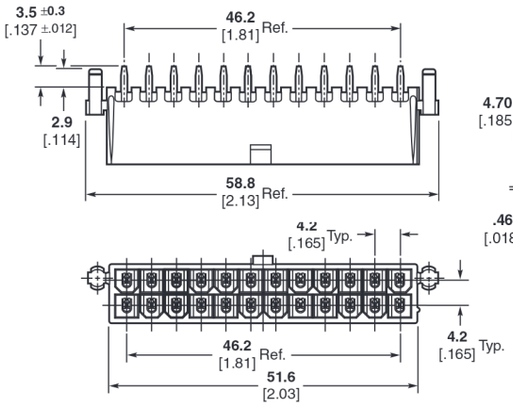

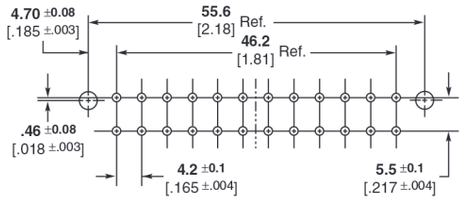

Recommended PC Board Layout

Number of Positions	PCB Pegs	Drain Holes	Plating	Part Number	
				UL 94V-2, Natural	UL 94V-0, White
24	Y	N	Tin	2-1586489-4	2-1586493-4
	Y	N	30 Gold	2-1586490-4	2-1586494-4
	N	N	Tin	2-1586491-4	2-1586495-4
	N	N	30 Gold	2-1586492-4	2-1586496-4
	Y	Y	Tin	794313-3	1-794472-1
	Y	Y	30 Gold	794313-4	1-794472-2
	N	Y	Tin	1-794360-1	1-794494-1
	N	Y	30 Gold	1-794360-2	1-794494-2

Right-Angle Header Assemblies

2-24 Position, with Pegs and without Drain Holes

Material and Finish

Housing— Nylon
UL 94V-2, Natural color
UL 94V-0, White color
Contacts— Copper alloy

Related Product Data

Mate with—Receptacle housings (page 126).
Technical Documents— pages 125 and 205-206

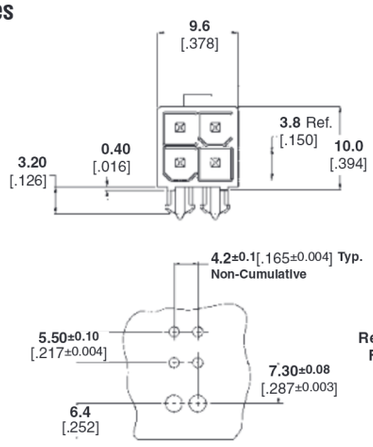

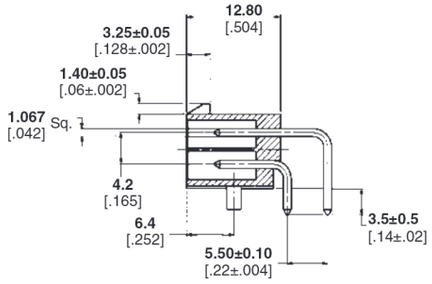

Recommended Mounting Hole Pattern For 1.78 [.070] Max. Thick PC Board (Component Side Shown)

Number of Positions	PCB Pegs	Drain Holes	Plating	Part Number	
				UL 94V-2, Natural	UL 94V-0, White
2	Y	N	Tin	1-794507-1	1-794526-1
4	Y	N	Tin	1-794508-1	1-794527-1
6	Y	N	Tin	1-794448-1	1-794528-1
8	Y	N	Tin	1-794509-1	1-794529-1
10	Y	N	Tin	1-794510-1	1-794530-1
12	Y	N	Tin	1-794511-1	1-794531-1
14	Y	N	Tin	1-794512-1	1-794532-1
16	Y	N	Tin	1-794513-1	1-794533-1
18	Y	N	Tin	1-794514-1	1-794588-1
20	Y	N	Tin	1-794449-1	1-794534-1
22	Y	N	Tin	1-794515-1	1-794589-1
24	Y	N	Tin	1-794516-1	1-794590-1

Note: All part numbers are RoHS Compliant.

Catalog 82181
Revised 4-08

https://cwindustrial.co.za/

Dimensions are in inches and millimeters unless otherwise specified. Values in brackets are metric equivalents.

Dimensions are shown for reference purposes only. Specifications subject to change.

USA: 1-800-522-6752
Canada: 1-905-470-4425
Mexico: 01-800-733-8926
C. America: 52-55-1106-0803

South America: 55-11-2103-6000
Hong Kong: 852-2735-1628
Japan: 81-44-844-8013
UK: 44-8706-080-208

High Density Catalog.pdf 1 06/04/2022 09:28:34

High Density Catalog.pdf 1 05/04/2022 15:09:41

Engineering Notes

Physical Address:
Unit 31
Great North Industrial Park
20 Van Wyk Road,
Benoni
1501

Contact Details:
+27 63 527 9870
+27 11 918 0011
+27 81 025 7343

Email: sales@cwindustrial.co.za